Waldorf®
800 SERIES

Installation and Operation Manual

600 mm Electric Deep Fryers

FN8135E
FN8135EE
FN8235E
FN8235EE

FNB8135E
FNB8135EE
FNB8235E
FNB8235EE

Date Purchased

Serial Number

Dealer

Service Provider

For use in GB & IE

248714-3

MANUFACTURED BY

Moffat Limited
Rolleston 7675
New Zealand

INTERNATIONAL CONTACTS

AUSTRALIA

Moffat Pty Limited

Web:	www.moffat.com.au
E.Mail:	vsales@moffat.com.au
Main Office:	(tel) +61 (03) 9518 3888
	(fax) +61 (03) 9518 3833
Service:	(tel): 1800 622 216
Spares:	(tel): 1800 337 963
Customer Service:	(tel): 1800 335 315
	(fax): 1800 350 281

CANADA

Serve Canada

Web:	www.servecanada.com
E.Mail:	info@servecanada.com
Sales:	(tel): 800 551 8795 (Toll Free)
Service:	(tel): 800 263 1455 (Toll Free)

NEW ZEALAND

Moffat Limited

Web:	www.moffat.co.nz
E.Mail:	sales@moffat.co.nz
Main Office:	(tel): 0800 663328

UNITED KINGDOM

Blue Seal

Web:	www.blue-seal.co.uk
E.Mail:	sales@blue-seal.co.uk
Sales:	(tel): +44 121 327 5575
	(fax): +44 121 327 9711
Spares:	(tel): +44 121 322 6640
	(fax): +44 121 327 9201
Service:	(tel): +44 121 322 6644
	(fax): +44 121 327 6257

UNITED STATES

Moffat

Web:	www.moffat.com
Sales:	(tel): 1-800 551 8795 (Toll Free)
	(tel): 336 661 1556
	(fax): 336 661 9546
Service:	(tel): 866 673 7937 (Toll Free)

REST OF WORLD

Moffat Limited

Web:	www.moffat.co.nz
E.Mail:	export@moffat.co.nz

The reproduction or copying of any part of this manual by any means whatsoever is strictly forbidden unless authorized previously in writing by the manufacturer.

In line with policy to continually develop and improve its products, Moffat Ltd. reserves the right to change the specifications and design without prior notice.

© Copyright Moffat Ltd. November 2025.

Waldorf Electric Deep Fryer

FN(B)**8135E -**	**'Fast-Fri' Electric Fryer, Manual Control**	**(Single Tank - 35ltr, 22kW).**
FN(B)**8135EE -**	**'Fast-Fri' Electric Fryer, Digital Control**	**(Single Tank - 35ltr, 22kW).**
FN(B)**8235E -**	**'Fast-Fri' Electric Fryer, Manual Control**	**(Twin Tank - 35 ltr, 22kW).**
FN(B)**8235EE -**	**'Fast-Fri' Electric Fryer, Digital Control**	**(Twin Tank - 35 ltr, 22kW).**

Introduction **3**

Specifications **4**
- Model Numbers Covered in this Specification
- Electrical Supply Requirements

Dimensions **5**

Installation **7**
- Installation Requirements
- Unpacking
- Location
- Clearances
- Assembly
- Fitting Rear Rollers
- Electrical Connection
- Commissioning

Operation **10**
- Operation Guide
- Description of the Controls - FN8135E and FN8235E Models Only
- Description of the Controls - FN8135EE and FN8235EE Models Only
- Control Panel Functions - FN8135EE and FN8235EE Models Only
- Controller Basic Programming Mode - FN8135EE andFN8235EE Models Only
- Filling the Tank(s)
- Operation of the Appliance
  - FN8127E and FN8224E Models Only
  - FN8127EE and FN8224EE Models Only
- 'Over Temperature' Control System

Cleaning and Maintenance **17**
- General
- Draining and Daily Cleaning
- Weekly Cleaning
- Periodic Maintenance

Fault Finding **20**
- Guide to Cooking Problems with Fryer
- Fault Finding the Electrical System

Contents

Circuit Schematics **23**
FN8135E Single Tank
FN8235E Twin Tank
FN8135EE Single Tank
FN8235EE Twin Tank
Wiring Diagrams **27**
FN8135E Single Tank
FN8235E Twin Tank
FN8135EE Single Tank
FN8235EE Twin Tank

Controller Advanced Programming Mode **31**
Timing Mode.
Temperature Offset.
Temperature Display Mode.
Programming the Melt Cycle.
Setting the Temperature Units.
System Programmable Default Settings.

Replacement Parts List **34**

We are confident that you will be delighted with your WALDORF Electric Deep Fryer, and it will become a most valued appliance in your commercial kitchen.

To ensure you receive the utmost benefit from your new Waldorf Electric Deep Fryer, there are two important things you can do.

Firstly:

Please read the instruction book carefully and follow the directions given. The time taken will be well spent.

Secondly:

If you are unsure of any aspect of the installation, instructions or performance of your appliance, contact your WALDORF dealer promptly. In many cases a phone call could answer your question.

CE Only:

These instructions are only valid if the country code appears on the appliance. If the country code is not shown, refer to the appliance supplier to obtain the technical instructions for adapting the appliance to the conditions for use in that country.

Warning

IMPROPER INSTALLATION, ADJUSTMENT, ALTERATION, SERVICE OR MAINTENANCE CAN CAUSE PROPERTY DAMAGE, INJURY OR DEATH. READ THE INSTALLATION, OPERATING AND MAINTENANCE INSTRUCTIONS THOROUGHLY BEFORE INSTALLING OR SERVICING THIS APPLIANCE.

Warning

THE OPERATOR MUST TAKE GREAT CARE TO USE THE EQUIPMENT SAFELY AND TO GUARD IT AGAINST THE RISK OF FIRE.

- **THE APPLIANCE MUST NOT BE LEFT ON UNATTENDED.**
- **IT IS RECOMMENDED THAT A REGULAR INSPECTION IS MADE BY A COMPETENT SERVICE PERSON TO ENSURE CORRECT AND SAFE OPERATION OF YOUR APPLIANCE IS MAINTAINED.**
- **DO NOT STORE OR USE GASOLINE OR OTHER FLAMMABLE VAPOURS OR LIQUIDS IN THE VICINITY OF THIS OR ANY OTHER APPLIANCE.**
- **DO NOT SPRAY AEROSOLS IN THE VICINITY OF THIS APPLIANCE WHILE IT IS IN OPERATION.**

Caution

- **This appliance is for professional use and is only to be used by qualified persons.**
- **Only authorised service persons are to carry out installation or servicing operations.**
- **Components having adjustments protected (e.g. paint sealed) by the manufacturer should not be adjusted by the user / operator.**
- **DO NOT operate the appliance without the legs supplied fitted.**

2 Specifications

Model Numbers Covered in this Specification

Model Number	Model Name	Model Type	Capacity	Total Power Input	Net Weight
FN[1]**8135E**	**'Fast-Fri' Electric Fryer**	Single Tank, Manual Control	35 ltr	22 kW	74 kg
FN[1]**8135EE**	**'Fast-Fri' Electric Fryer**	Single Tank, Digital Control	35 ltr	22 kW	74 kg
FN[1]**8235E**	**'Fast-Fri' Electric Fryer**	Twin Tank, Manual Control	35 ltr	22 kW	77 kg
FN[1]**8235EE**	**'Fast-Fri' Electric Fryer**	Twin Tank, Digital Control	35 ltr	22 kW	77 kg

NOTE:

[1]: - Model Options;

- - Standard.
B - Bold Front.

Electrical Supply Requirements

Warning

THIS APPLIANCE MUST BE EARTHED. IF SUPPLY CORD IS DAMAGED, IT MUST BE REPLACED BY A SUITABLY QUALIFIED PERSON IN ORDER TO AVOID A HAZARD.

Electrical Connection

Model	Power Supply			Total Power Input	Amps		
	Voltage	Type	Frequency		L1	L2	L3
FN8135E / EE	400-415Vac	3 P+N+E	50 / 60Hz	22kW	30.5	30.5	30.5
FN8235E / EE	400-415Vac	3 P+N+E	50 / 60Hz	22kW	30.5	30.5	30.5

When connecting this electric appliance to the mains supply, ensure that the following is carried out:-

- The supply cord shall not be lighter than ordinary tough rubber sheathed (oil resistant) cord. e.g. H05 RN-F with sufficient current carrying capacity cable sizes.
- The branch supply line shall be overload protected.
- The point of connection shall be as close as practicable to the appliance have an isolating switch accessible during manual operation of the appliance.
- The supply cord shall be protected against any mechanical or thermal damage.

Refer to the appropriate wiring standards for the size of cable that is to be supplied to an appliance for the current drawn on that line.

FN8135E

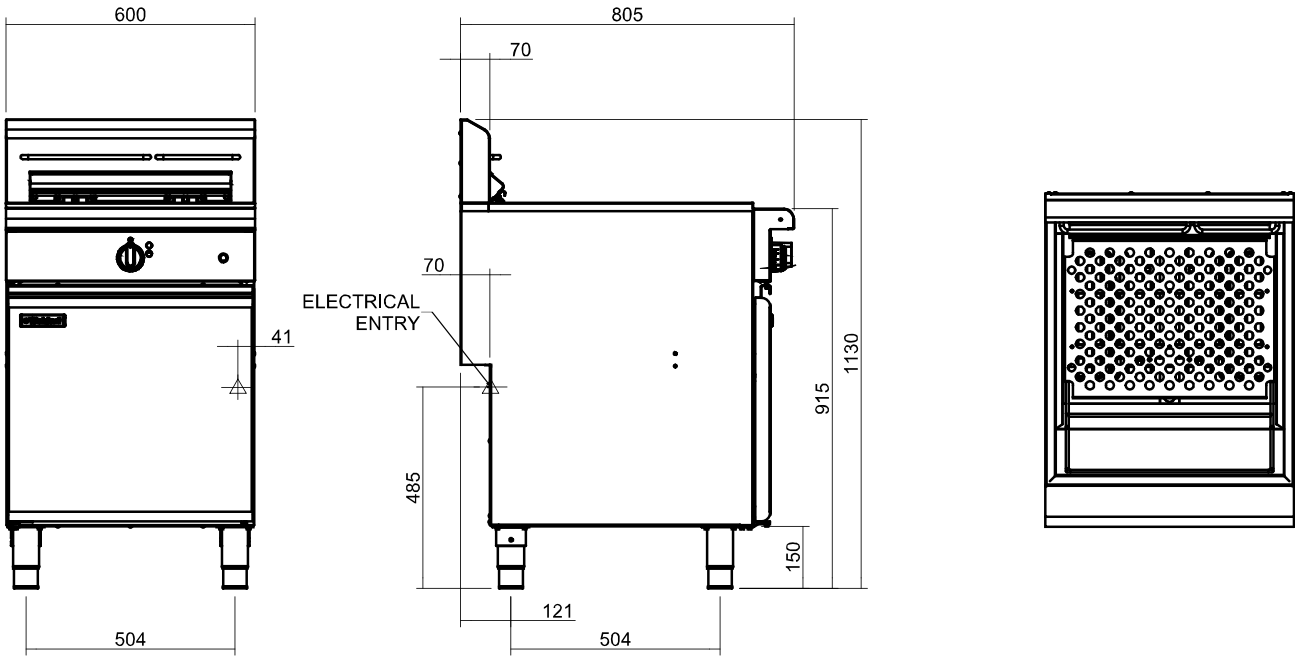

FN8235E

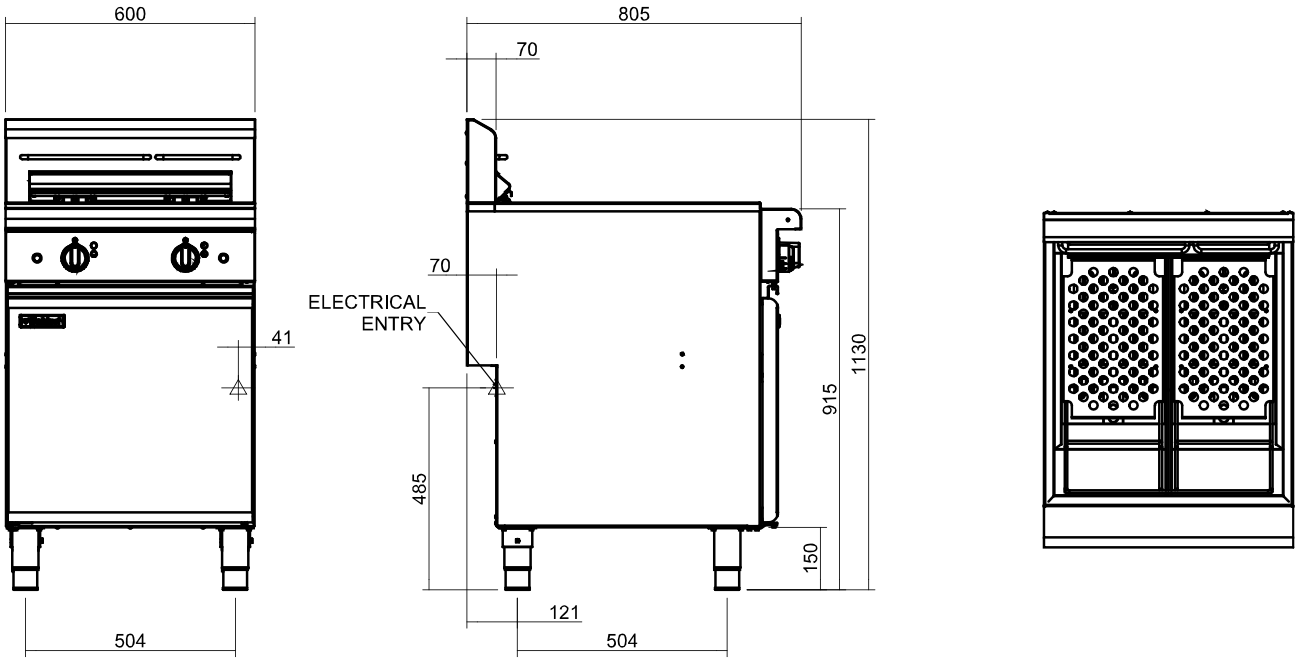

Electrical Entry Point.

3 Dimensions

FN8135EE

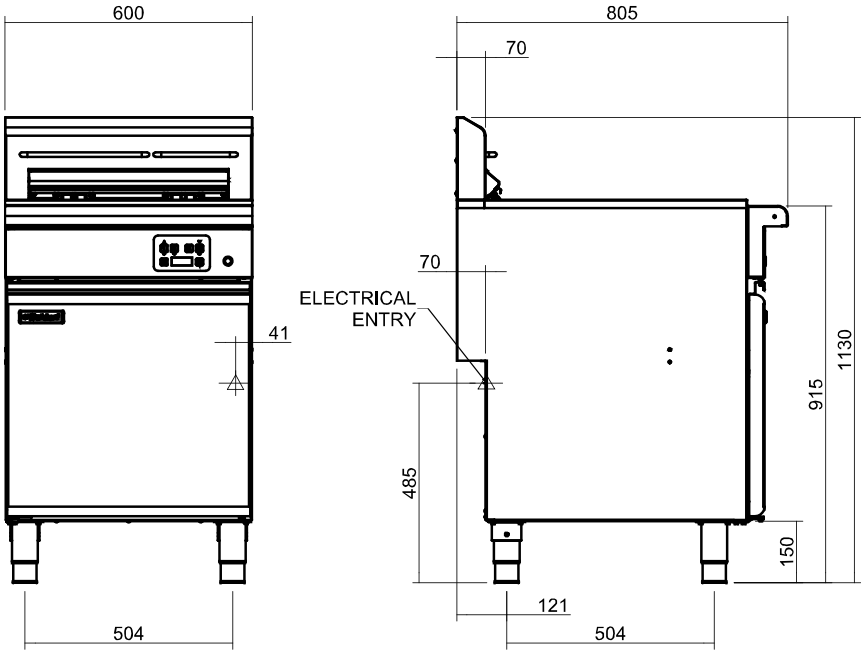

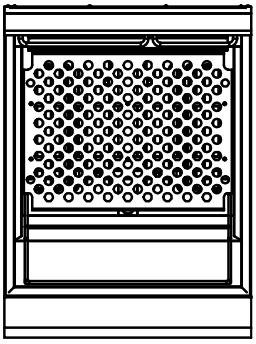

FN8235EE

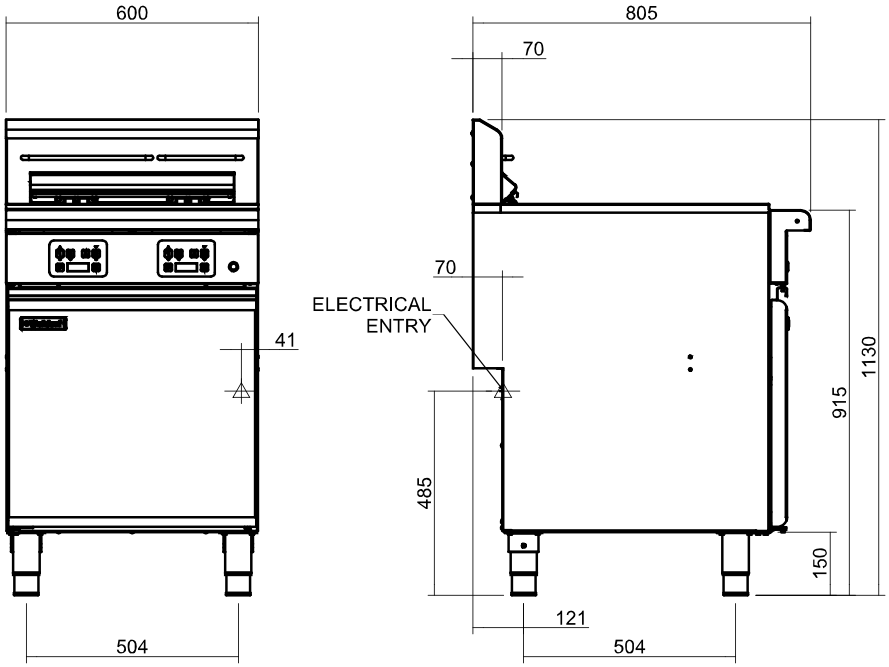

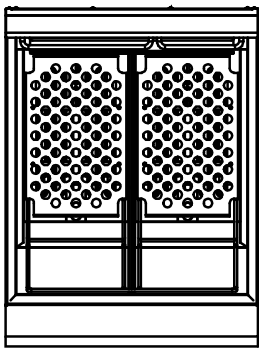

Electrical Entry Point.

Installation Requirements

NOTE: It is most important that this appliance is installed correctly and that operation is correct before use. Installation shall comply with local electrical and health and safety requirements.

Waldorf Deep Fryers are designed to provide years of satisfactory service, and correct installation is essential to achieve the best performance, efficiency and trouble-free operation.
This appliance must be installed in accordance with National installation codes and in addition, in accordance with relevant National / Local codes covering health and safety, electrical and fire safety.

Australia / New Zealand	**AS / NZS3000**	- Wiring Rules.
United Kingdom:	**BS 7671**	- Requirements for Electrical Installations.

Installations must be carried out by qualified service persons only. Failure to install the equipment to the relevant codes and manufacturers specifications shown in this section will void the warranty.

Unpacking

- Remove all packaging and transit protection from appliance including all protective plastic coating from door outer panel and exterior stainless steel panels.
- Check equipment and parts for damage. Report any damage immediately to carrier and distributor.
- Report any deficiencies to distributor who supplied appliance.
- Check available electrical supply is correct to as shown on rating plate on inside of access door.
- Check the following parts have been supplied with appliance:

	FN8135E / EE	FN1235E / EE
Baskets	3	2
Lid	1	1
Basket Tray	1	2

Location

1. Any appliance requires adequate clearance and ventilation for optimum and trouble-free operation. Minimum installation clearances shown below, are to be adhered to.
2. Position the Deep Fryer in its approximate working position.
3. Legs (rear rollers - optional) must always be fitted. Ensure the legs / rollers are securely attached.

Clearances

	Combustible Surface	Non Combustible Surface
Left / Right Hand Side	50mm	0mm
Rear	25mm	0mm

NOTE:

- **Only non-combustible materials can be used in close proximity to this appliance.**
- **To allow easy operation, drainage and servicing of the appliance, a minimum of 600mm clearance should be maintained at front of appliance.**

Assembly

This model is delivered completely assembled. Ensure that the legs are securely attached.

NOTE:

- **This appliance is fitted with adjustable feet to enable it to be positioned securely and level on uneven floors. This should be carried out on completion of gas connection. Refer to 'Gas Connection Section'.**
- **The rear leg housings on this appliance can also be fitted with rear rollers to enable the appliance to be easily moved for positioning and cleaning purposes. If desired, these rollers are supplied in the packaging, with tappliance. See overleaf for fitting instructions.**

Optional Accessories (Refer to Replacement Parts List)

- Plinth Kit. For installation details, refer to the instructions supplied with each kit.

Fitting Rear Rollers.

1. Raise the appliance from the floor by approx. 75mm, using suitable lifting equipment (i.e. Palletiser / Forklift) to allow rear adjustable feet to be removed.
2. Unscrew and remove both rear adjustable feet from rear leg housings.
3. Fit rear roller to rear leg housing and align screw hole in side of rear leg housing with threaded hole in rear roller.
4. Secure the rear roller to the leg support with bolt supplied and tighten bolt.
5. Fit second roller and tighten securing bolt.
6. Lower appliance back to the floor and adjust front adjustable feet to level appliance.

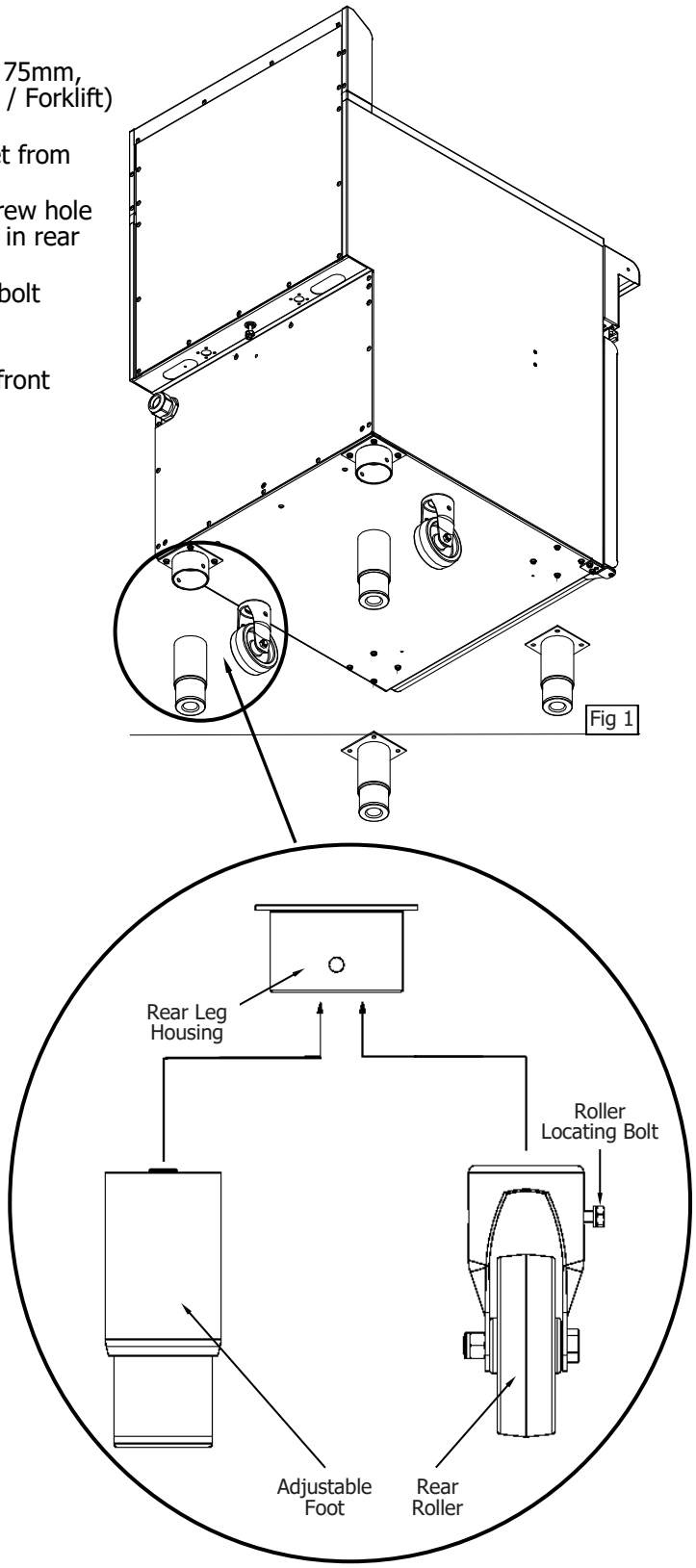

Fig 1

Electrical Connection

NOTE: ALL ELECTRICAL CONNECTIONS MUST ONLY BE CARRIED OUT BY A QUALIFIED PERSON.

Each fryer should be connected to an adequately protected power supply and an isolation switch mounted adjacent to, but not behind the fryer. This switch must be clearly marked and readily accessible in case of fire.

1. Check the electricity supply is correct to as shown on the Rating Plate attached to the inside of the access door.
2. Supply terminal connections are located at the lower front of the fryer.
3. Open the door and remove the service panel (2 screws) located behind the drain valve(s) to allow connection access for electrical supply.
4. Bring the supply cable up through the compression type gland at the rear of the fryer and through the compression gland provided on rear of main electrical switchgear panel.
5. Connect mains supply to L1, L2 and L3 terminal blocks for 3 phases.
6. Connect neutral and earth conductors to the neutral and earth terminal blocks respectively.
7. For all connections ensure that the conductors are secure and appropriately terminated.
8. Tighten the cable glands to secure against tension on the cable.

NOTE:

- **This appliance must be grounded / earthed.**
- **Fixed wiring installations must incorporate an all-pole disconnection switch.**

Commissioning

1. Before leaving the new installation;
   a. Check the following functions in accordance with the operating instructions specified in the 'Operation' section of this manual.
      - Check current draw and loading for the equipment. Refer to the Specifications section for correct electrical requirements.
      - Check all connections are correct and that all cover panels have been re-fitted.
      - Check that the unit functions in accordance with the operating instructions.
      - Ensure the tank drain extension and this instruction manual are left with the appliance.
      - Ensure that all relevant details and contacts have been added to the front of this manual.

   b. Check the thermostat operation by filling the fryer with oil / shortening to the appropriate oil 'FILL LEVEL' mark and setting the thermostat to 180°C. Turn 'On' the fryer as shown in 'Operation Instructions' in this manual.
   c. Check the calibration of the thermostat once oil is up to temperature. If a discrepancy is found, thermostat calibration should be referred to the supplier.
   d. Ensure the operator has been instructed in the correct operation and shutdown procedure for this appliance.

   Initial Start-Up
   Before using the fryer;
   a. For first time use of the fryer and before using fryer for cooking product, fill the fryer with oil and operate fryer for about 1 hour at **maximum temperature** setting to remove any fumes or odours which may be present in the new appliance.
   b. Refer to Operation Section of this manual for details on how to operate the fryer.

2. This manual must be kept by the owner for future reference, and a record of **Date of Purchase**, **Date of Installation** and **Serial Number of Appliance** is recorded and kept with this manual. (These details can be found on the Rating Plate fitted to the inside of the access door and in 'Specifications' section of this manual.

NOTE:

- **If it is not possible to get the fryer to operate correctly, turn 'Off' electrical power and contact a qualified service person. Appliance supplier will recommend a suitable person.**
- **Make sure that the electrical supply is turned 'Off' before any service or maintenance work is carried out.**

Operation Guide

Caution

- **This appliance is for professional use and is only to be used by qualified persons.**
- **Only authorised service persons are to carry out installation or servicing operations on this appliance.**

Description of the Controls - FN8135E and FN8235E Models Only

FN8235E Twin Tank Model shown

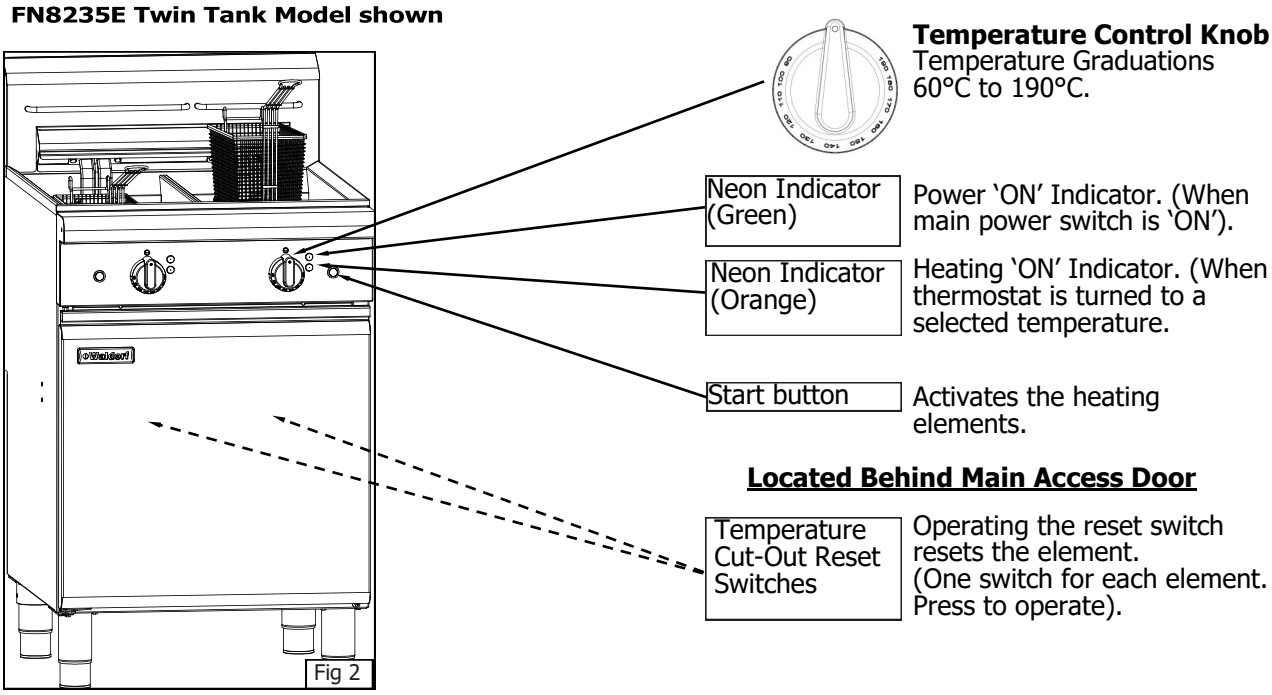

Fig 2

Description of the Controls - FN8135EE and FN8235EE Models Only

FN8135EE Single Tank Model shown

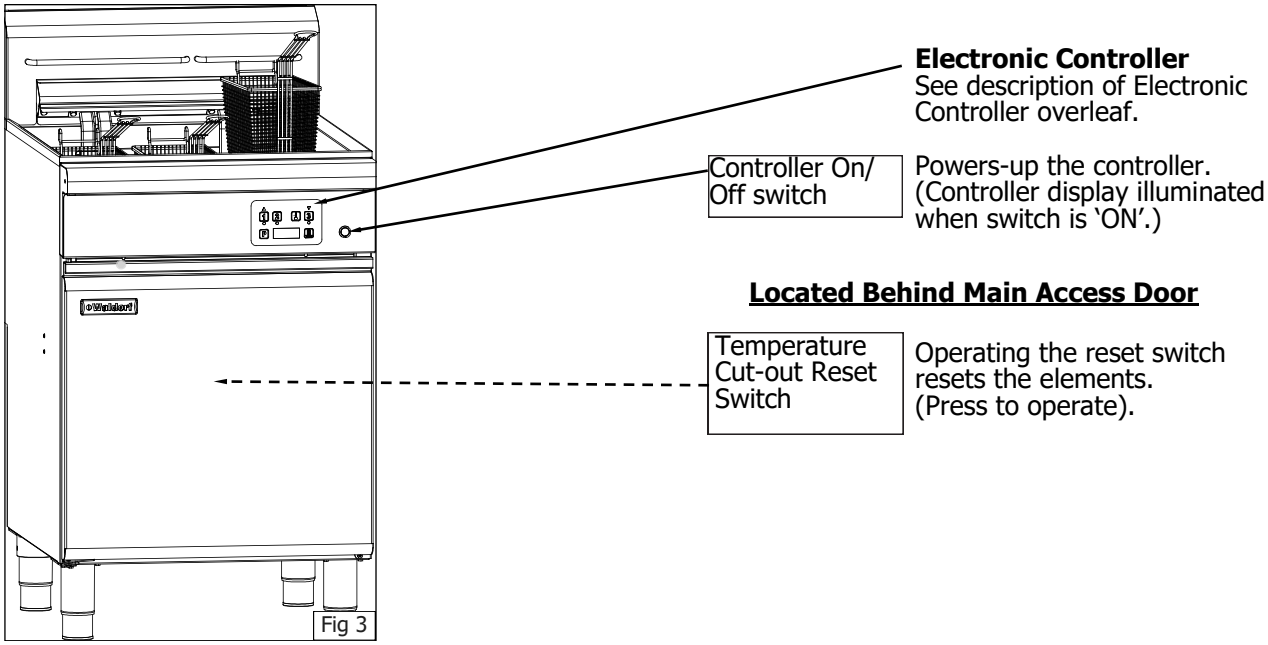

Fig 3

Control Panel Functions - FN8135EE and FN8235EE Models Only.

Each control panel comprises the following:-

Controller.

Controller On/Off switch.

The controller incudes the following:
One 4 digit, seven segment display with a 0.5” high, bright green LED display.

Three green LED indicator lights located under each of the 3 Timer Controls.

6 Touch Control Keys;-

‘ON’ / ’OFF’ Key.

Programme Key (P).

Left Timer - ‘UP’ Key and LED Indicator Light.

Centre Timer - and LED Indicator Light.

Right Timer - ‘DOWN’ Key and LED Indicator Light.

Temperature Key (Thermostat).

The 3 Timer Keys on each control panel can be used to program 3 different cook times for each tank.

NOTE: Only one temperature setting applies to all 3 timers.

Controller Basic Programming Mode - FN8135EE and FN8235EE Models Only

The following Parameters can be changed in Controller Basic Programming Mode:-

- **Timer 1 - Cook Time Settings.**
- **Timer 2 - Cook Time Settings.**
- **Timer 3 - Cook Time Settings.**
- **Cooking Temperature Setting.**
- **Keypad 'Lock - Unlock' (Programming the Password Protection).**

NOTE:

- **Each Timer Key on the controller can be individually programmed with a different cook time.**
- **The user cannot enter Basic Programming Mode whilst a timer is running. An alarm will sound indicating the key press, but access to programming mode will be blocked.**

Entering the Controller Basic Settings

NOTE: Ensure that the Control Panel ON/OFF switch is 'ON' and the controller display is illuminated.

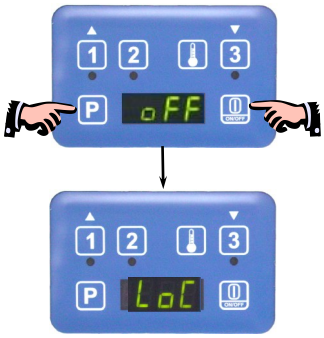

1. To enter 'Programming Mode', press Controller 'ON / OFF' key to turn 'ON' the Controller.
2. Press Programme Key 'P' to access the parameter setting required.

   a. If **'LoC'** is displayed, Controller is locked which will prevent any accidental change to the operating mode.
   b. To access parameters, whilst **'LoC'** is displayed on screen, enter the passcode '**1 1 3 3**'.

Setting the Parameters

1. To change the settings, press either 1 or 3 Key until the value required is shown on the display.
2. Press Programme Key 'P' to confirm new value and the change will be accepted. Display will step on to the next parameter.

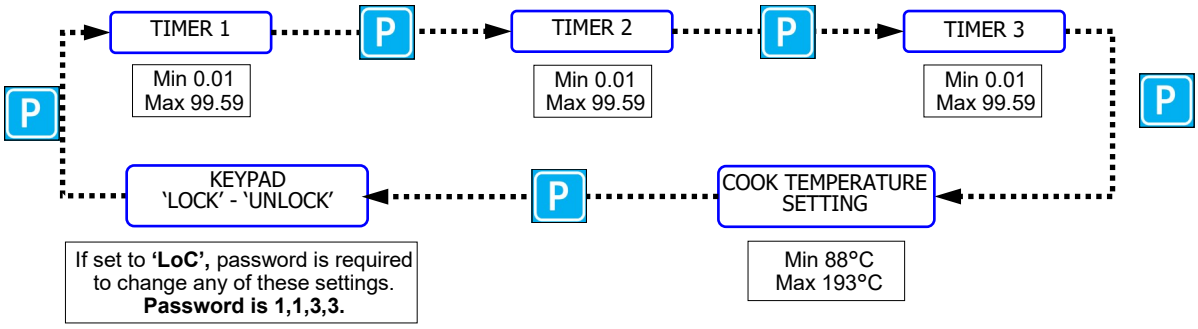

To Exit the Programming Mode.

To exit Programming Mode, press and hold Programme Key 'P' for approximately 3 seconds, **or** do not press any key for 2 minutes. The display will revert to 'Idle Mode'.

Filling the Tank(s)

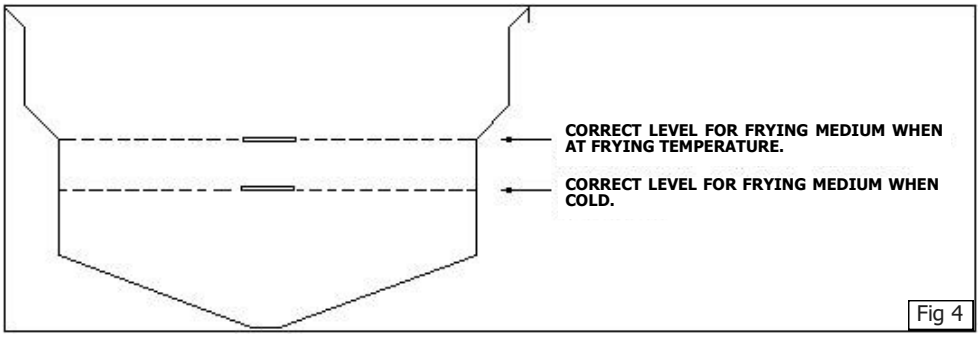

Fig 4

NOTE: WALDORF 'Deep Fryers' can be used with both oil and shortening.

1. Before filling the tank, always check that the drain valve behind the door is closed. A locking slide is provided on these valves and this should always be in the locked position during use.
2. Ensure that the elements are swung down into the tank(s).

OIL - Carefully fill the fryer tank until the lower 'Fill Level' mark is reached.
Set the thermostat to the required operating temperature, the oil will expand as heated and will reach the upper level mark when the oil is hot (180 - 190°C).

- The FN8135 single tank fryer will hold 35 to 40 litres of oil.
- The FN8235 twin tank fryer will hold 17.5 to 20 litres of oil per pan.

SHORTENING - Ideally shortening should be pre-melted prior to putting it into the tank. This is normally done in a suitable vessel on a boiling table burner(s). The liquefied shortening can then be poured into the tank until it reaches the 'FILL LEVEL' mark.

- The FN8135 single tank fryer will hold 29 - 33 kg of shortening.
- The FN8235 twin tank fryer will hold 14.5 kg to 16.5 of shortening per tank.

Pre-Heating

NOTE: When pre-melting shortening, only heat the shortening until it is just liquefied. <u>Do not bring the shortening up to high temperature as handling of hot shortening is dangerous</u>.

- If it is not possible to pre-melting the shortening, carefully cut shortening into small pieces and pack below, all around and above the elements, ensuring that the element can fully lower to operate the element tilt microswitch, otherwise the fryer will not operate.
- **FN8135E and FN8235E Only;-** Set the tank control thermostat to 120°C and switch 'ON' the appliance for 30 seconds and then 'OFF' for 1 minute. Repeat the cycle until all the shortening is melted enough to apply full power to the heating elements. To speed up this process, break up the shortening and stir carefully during the melting process.
- Add more shortening until the tank is filled to the level marked on the tank side. Refer to Fig 4 above.

NOTE: Running the elements continuously will cause the shortening in contact with the element to overheat, resulting in premature oil breakdown. Never allow the shortening to smoke whilst melting as this indicates that the temperature is too high. If the shortening starts smoking, increase the 'Off' intervals of the elements.

Operation of the Appliance

Warning

THE OPERATOR MUST TAKE GREAT CARE TO USE THE EQUIPMENT SAFELY AND TO GUARD IT AGAINST THE RISK OF FIRE.

- **DO NOT LEAVE THE FRYER UN-ATTENDED DURING OPERATION.**
- **DO NOT REPLENISH THE OIL (FRYING MEDIUM) IN THE FRYER WHEN THE FRYER IS HOT.**
- **DO NOT OVER FILL THE OIL (FRYING MEDIUM) IN THE FRYER ABOVE THE TOP LEVEL MARK.**
- **DO NOT ALLOW THE OIL (FRYING MEDIUM) IN THE FRYER TO FALL BELOW THE LOWER LEVEL MARK.**
- **DO NOT ALLOW THE OIL (FRYING MEDIUM) IN THE FRYER TO OVERHEAT.**
- **DO NOT INTRODUCE WET FOOD OR WATER INTO THE HOT OIL (FRYING MEDIUM).**
- **DO NOT USE FLAMMIBLE SOLVENTS AND CLEANING AIDS ON OR IN CLOSE PROXIMITY TO THE FRYER WHILST THE FRYER IS STILL HOT.**

WARNING

DO NOT ATTEMPT TO MOVE THE FRYER WHILST THE FRYER IS FULL OF OIL.

FN8135E and FN8235E Models Only.

1. Turn 'ON' mains power at mains supply, ensure that Temperature Cut-Out Reset Switch has been reset (which is located behind front access door, one for each tank on twin tank fryers FN8235E and FN8235EE).
2. Rotate the temperature control knob to the required temperature.
   NOTE: All neon indicators on the control panel remain off.
3. Press the Start button on the control panel. Green neon indicator will illuminate to indicate that there is mains power to the fryer.
   NOTE: If the temperature control knob is in the 'Off' position, the fryer will not start.
4. With the temperature control knob set to the required temperature, the Orange neon indicator will illuminate to indicate that the heating elements are 'On'.
5. When oil in tank reaches the set temperature, Orange neon will extinguish to indicate that fryer is up to the selected temperature.
6. Turn 'OFF' the fryer.
7. Turn 'OFF' mains power at mains supply.

FN8135EE and FN8235EE Models Only.

Fryer Operation (Flow Chart)
Refer to 'Controller Basic Programming Mode' at the start of this section for the basic programmable settings for the controller.

Refer to the 'Controller Advanced Programming Mode' section for controller advanced programming.

If Melt Cycle is turned ON.

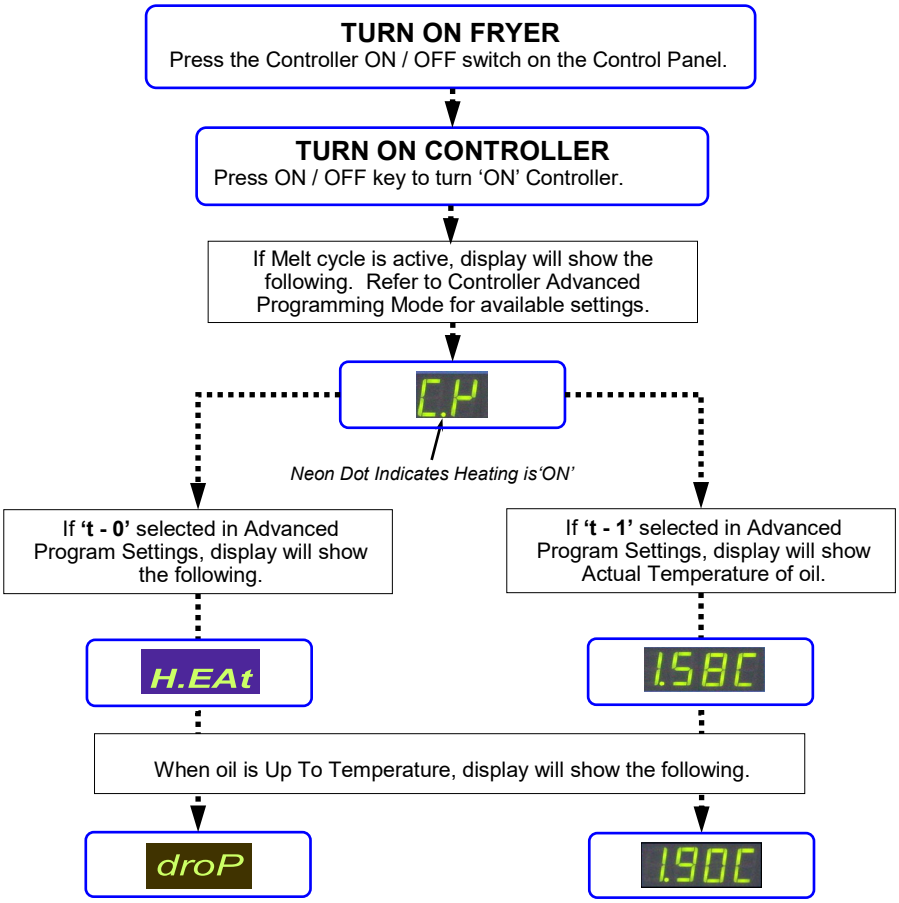

Fryer can now be used without using the Timers, if required.

If Melt Cycle is turned OFF.

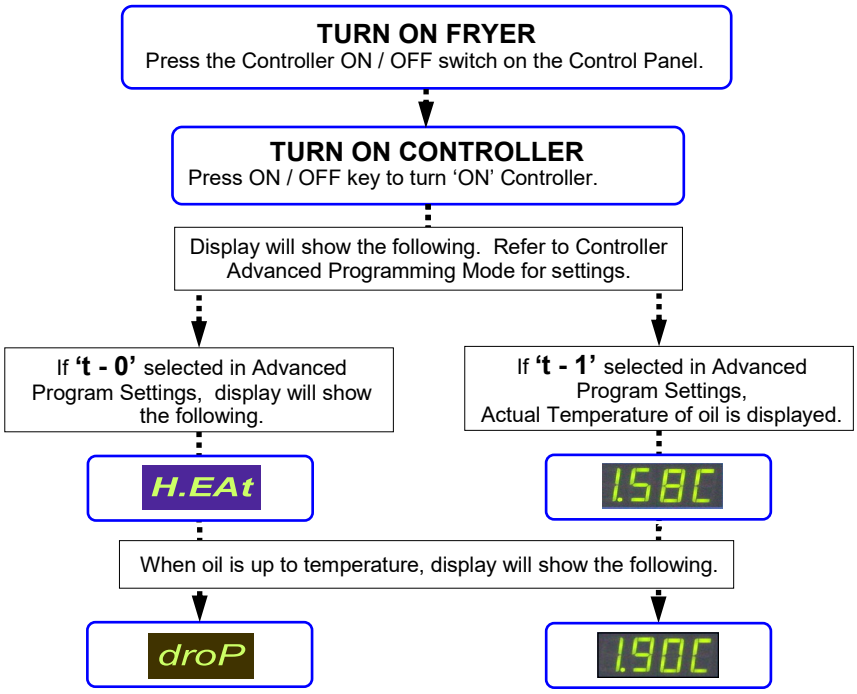

Fryer can now be used without using the Timers, if required.

To Use the Timers

NOTE: Refer to 'Basic Programming Mode' for information on how to set the Timer Pre-Set times.

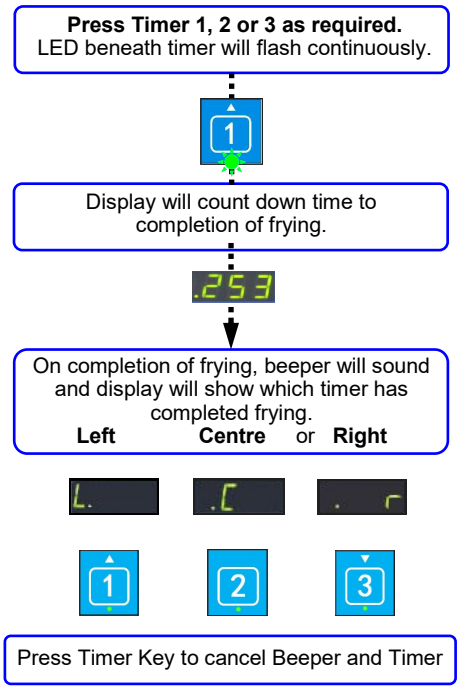

To Use the Temperature Display

NOTE: Refer to 'Basic Programming Mode' for information on how to set the Cooking Temperature.

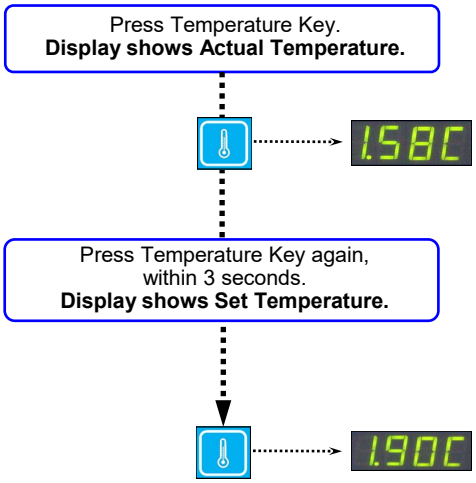

Turning 'OFF' the Fryer

1. Press the 'On /Off' Key on the controller.
2. Press the Controller 'On/OFF' switch on the control panel.
3. Turn 'Off' the power supply at the mains supply.

'Over-Temperature' Control System

These fryers have been fitted with a 'Fail Safe Over Temperature Safety Cut-Out' which will protect the oil / fat from excessive temperature if the thermostat control should fail. The power light will turn 'Off' if the over temperature control has been triggered. The twin tank fryer (FN8224E) has an individual 'Fail Safe Over Temperature Safety Cut-Out' for each tank.

Over-Temp Control
The over-temp thermostat is mounted behind the transformer panel, behind the access door and its sensing bulb is located alongside the thermostat (E and EE Models).

This control is set for approx. 225-235°C oil cutout temperature. To reset the 'Overtemp Control', turn 'Off' the fryer and allow the oil to cool down to approx 160-180°C. Press the reset button on the Cut-Out Switch to reset the 'Overtemp Control', then restart the fryer by following the operating instructions specified in this manual.

NOTE: On dual tank models, if either 'Over-Temperature Control' is triggered, a fault exists in the main thermostat and this must be reported and repaired. For temporary operation, the tank that is still operational may be used for cooking.

General

Warning

DO NOT USE FLAMMIBLE SOLVENTS AND CLEANING AIDS ON OR IN CLOSE PROXIMITY TO FRYER WHILST FRYER IS STILL HOT.

Caution

Always turn 'Off' electrical supply before cleaning the fryer.

This appliance is not water proof.

Do not use water jet spray to clean interior or exterior of this appliance.

To achieve the best results, cleaning must be regular and thorough and all controls and mechanical parts checked and adjusted periodically by a competent serviceman. If any small faults occur, have them attended to promptly. Don't wait until they cause a complete breakdown. It is recommended that a service check is conducted every six months.

Clean the fryer regularly. A clean fryer looks better, will last longer and will perform better.

NOTE:

- **DO NOT use sharp scrapers, strong solvents, abrasive or caustic detergents as they could corrode or damage the fryer.**
- **Ensure that any detergent or cleaning material has been completely removed after each cleaning.**

To keep your fryer clean and operating at peak efficiency, follow the procedures shown below:-

Draining and Daily Cleaning

WARNING

DO NOT ATTEMPT TO MOVE THE FRYER WHILST THE FRYER IS FULL OF OIL.

BEFORE ATTEMPTING TO MOVE THE FRYER, ENSURE THAT ALL THE OIL HAS BEEN DRAINED FROM THE TANK. REFER TO THE INFORMATION BELOW ON HOW TO DRAIN THE OIL FROM THE FRYER.

Caution

Never drain the fryer with power or elements turned 'ON'

Always switch 'OFF' fryer before draining or re-filling tank.

1. At the end of each day or at the end of each shift, if frying schedule is heavy, frying medium should be drained and filtered into a receptacle.
2. Always filter the fryer when the cool zone under elements is hot and liquid. A cold fryer heated up won't drain, because frying medium in this zone will remain hard if using solid fat / oils.
3. Position a suitable container and filter under the drain extension pipe (see Fig 5).

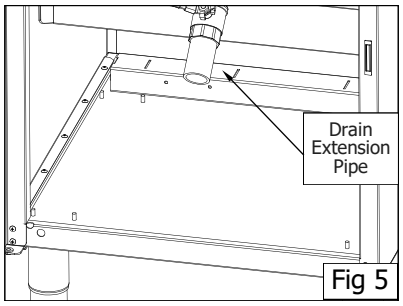

Fig 5

Opening the Drain Valve

Warning

HOT OIL WILL BURN - DO NOT RUSH THIS JOB.

a. Lift the locking slide on valve handle (Fig 6) to release the valve.
b. While holding the locking slide in the withdrawn position, rotate handle anticlockwise (Fig 7) to open the valve.
c. When the valve is closed, the locking slide will drop down over the locking valve to prevent accidental opening of the valve, as shown in Fig.6.

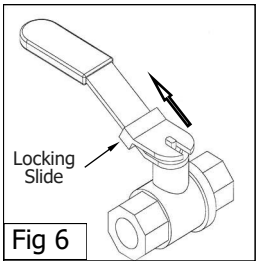

Fig 6

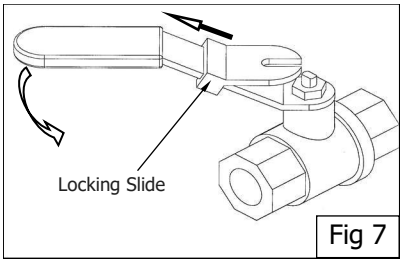

Fig 7

4. Do not empty total fryer contents into one large container, as this will be dangerous and may be difficult, when lifted up, to pour hot oil back into the fryer tank.
5. Slip a muslin or other suitable filter bag over the end of the drain valve. Crumbs will be caught in the bag but the frying medium will strain freely through into the container.
6. Open the drain valve slowly to minimise splashing, and take care not to overfill the container.
7. When tank has been drained, use a ladle or small pan with a handle and dip into the hot frying medium from the container and pour around the sides and bottom of the fryer tank to wash out crumbs and particles adhering to the tank.
8. Continue to dip and pour until all crumbs and particles are washed down and into the filter bag.
9. Open the drain valve fully and check for any particles or crumb residue lodged in the valve. Clean out the valve with a stiff nylon brush. Do not use a wire brush as this may damage the valve seating and will eventually lead to valve leakage. If the obstruction cannot be removed with a brush, use a wooden probe to dislodge the obstruction.
10. Wipe all exterior panels with a cloth dampened with detergent and rinse off any residue with clean warm water.
11. Clean the Control Panel with a damp cloth lightly moistened with a solution of water and a commercial quality foodservice approved detergent.
12. Once the daily cleaning is completed, close the drain valve and pour the frying medium back into the fryer tank.

Weekly Cleaning

NOTE: If fryer usage is very high, we recommend that the weekly cleaning procedure is carried out more frequently.

1. Proceed to drain and filter the tank, as shown in 'Daily Cleaning'. Do not refill the tank with frying medium until the tank has been cleaned as shown below.
2. Fill the fryer with cold water to the normal fill level and add a high quality commercial cleaner that has been specifically formulated for fryers. *All purpose cleaners are not recommended.*

NOTE: Never use a caustic or lye solution, as this will leave a fat destroying film on the tank.

3. Ensure that the elements are lowered into the tank. Switch 'ON' the power and heat the water to approximately 80-90°C.
4. Clean the fryer baskets at the same time by immersing them in the cleaning solution. Allow the fryer to soak for 5-10 minutes or as directed on the cleaner instructions. Remove the baskets and switch 'OFF' the fryer.
5. Scrub the baskets and fryer tank lightly, but vigorously with a stiff nylon bristle brush to remove any remaining deposits. **DO NOT use a wire brush, as this will scratch the sides of the tank.**
6. Empty the fryer and rinse thoroughly with water. Use a 1 part vinegar to 15 parts water solution to rinse the tank and neutralise any cleaner residue. If this proves unsuitable for the cleaner being used, use a weaker solution of up to 1 part vinegar to 25 parts water.
7. Rinse the tank thoroughly with water, drain and dry.
8. Refill the tank with new filtered frying medium.

Stainless Steel Surfaces

a. With the tank(s) drained, cleaned and dried as shown above, clean the exterior surfaces of the fryer with hot water, a mild detergent solution and a soft cloth.
b. Dry all components thoroughly with a dry cloth and polish with a soft dry cloth.
c. To remove any discolouration, use an approved stainless steel cleaner or stainless steel wool. Always rub in the direction of the grain.

Periodic Maintenance

NOTE: All maintenance operations should only be carried out by a qualified service person.

To achieve the best results, cleaning must be regular and thorough. All controls and mechanical parts should be checked and adjusted periodically by a qualified service person. If any small faults occur, have them attended to promptly. Don't wait until they cause a complete breakdown. It is recommended that the appliance is serviced every 6 months.

Guide to Cooking Problems with Fryer

This section provides an easy reference guide to the more common problems that may occur during the operation of your equipment. The fault finding guide in this section is intended to help you correct, or at least accurately diagnose problems with your equipment.

Although this section covers the most common problems reported, you may encounter a problem not covered in this section. In such instances, please contact your local authorised service agent who will make every effort to help you identify and resolve the problem. Please note that the service agent will require the following information:-

- **Model Code and Serial Number of the appliance. (both can be found on the Rating Plate located on appliance).**

Fault	Possible Cause	Remedy
Frying Medium Foaming.	Presence of soap or detergent residue from cleaning the tank.	Rinse fryer thoroughly three times with clean water. Ensure fryer is perfectly dry before re-filling with frying medium.
	Excessive breakdown of frying medium.	Add fresh frying medium daily to replace contents every 3-5 days.
	Continual frying of food with excess moisture.	Remove excess moisture from foods to be fried.
	Continued overheating of oil.	Check thermostat setting. Turn down heat to around 120°C (Standby) when use is quiet.
	Overloading.	Maintain 1-8 ratio of food to frying medium.
Gumming.	Heating frying medium too rapidly.	When charging fryer or starting up, melt frying medium gradually.
	Continued overheating of the frying medium.	Check thermostat setting with a thermometer or thermocouple.
	Frying oil broken down.	Check amount of fresh frying medium added to fryer to be sure 'turnover' is adequate.
	Using wrong cooking frying medium.	Some frying mediums form gums when used in a deep fryer. e.g safflower oil.
Greasy Foods.	Frying at too low temperatures.	Increase temperature and check thermostat setting.
	Inadequate preparation of food.	Be sure foods (especially potatoes) are 'cured' correctly.
	Excessive quantities of breading or batter.	Remove surplus breading or batter.
	Placing food in frying medium direct from the freezer.	Allow frozen foods to thaw before frying.
	Surplus moisture in and on surface of food.	Drain and dry foods before frying.
	Frying medium in advanced stages of breakdown.	Discard 'old' frying medium and refill fryer with new frying medium.
	Use of dripping or other unrefined oil.	Due to low smoking point, cooking in these oils at lower temperatures will result in greater oil absorption by the food.
	Using the wrong kind of cooking oil.	Always use a completely refined and deodorised cooking oil.
Rapid Oil Breakdown.	Inadequate frying oil turnover.	Adjust procedures to fry more food in fryer to increase turnover.
	Oil overheating.	Check thermostat setting with a thermometer or thermocouple.
	Contamination.	Filter or strain the oil daily.
	Poor cleaning procedures.	Clean fryer daily or at least once a week and rinse thoroughly. Dry fryer before use.
	Presence of copper or brass in the fryer equipment.	Remove all copper or brass fittings from contact with the oil.
	Overloading the fryer.	Maintain 1-8 ratio of food to frying oil.
	Food excessively moist.	Drain and dry the food before frying.
	Oil overheating on 'Standby' mode.	Reduce temperature of frying oil to between 100°C and 120°C during idle ('Standby') periods.

Fault	Possible Cause	Remedy
Oil Smoking.	Insufficient turnover of oil.	Maintain a minimum quantity of oil in fryer for more rapid turnover or increase the quantity of food fried in fryer. Replace with fresh oil every 3 to 5 days.
	Continual frying with excess moisture on food.	Drain foods before frying, pat food dry.
	Contamination of oil.	Filter or strain daily to remove contaminants.
	Overheating of oil.	Check thermostat setting with a thermometer or thermocouple.
	Rapid breakdown of oil.	Use a stable frying oil.
	Use of unrefined oils.	Dripping smokes at lower temperature than refined and deodorised oils.
Darkening of Oil.	Presence of salt on the food.	Salt foods after frying and away from the fryer.
	Foods dipped in batter high in egg yolk.	Reduce egg content of batter, replace part egg with milk.
	Contamination of oil.	Filter or strain the oil daily to remove contaminants.
	Poor cleaning practice.	Clean fryer at least weekly or each day in cases of heavy usage. Ensure fryer is perfectly dry before use.
	Overheating of oil.	Check thermostat setting with a thermometer or thermocouple.
	Insufficient oil turnover.	Top up daily to replace the contents of fryer in 3 to 5 days.
	Cooking foods with high sugar levels.	At the end of the season, potatoes are usually high in reduced sugars. When fried, they will darken quickly and colour the oil.

NOTE: Excessive usage of oil is an indication of high absorption of oil into the food. This is a function of temperature and character of the goods being fried - NOT due to type of oil being used (unless refined oils are being used). Any variation in the apparent life of the oil is always due to one or more of the causes mentioned above.

Fault Finding the Electrical System

Fault	Possible Cause	Remedy
Elements do not Heat Up.	Check mains power is supplied to the unit and that a circuit breaker or fuse has not tripped / blown. Check element is flat and that the tilt microswitch is closed. Check thermostat setting is correct and that control knob is set to 'ON' position.	Turn On power and press the Controller 'ON/OFF' switch. Reset circuit breaker or replace blown fuse. Adjust microswitch so that the microswitch is activated when element is fully down in the flat (cooking position). Replace the thermostat. Call service provider.
Over-Temperature Thermostat Cuts Out.	Over-temperature thermostat faulty. Control thermostat not maintaining set temperature. a. Thermostat out of calibration. b. Thermostat does not open on temperature rise. Thermostat opens on temperature rise but electrical contactor does not respond.	If overtemp cuts out below 220ºC, replace over-temperature thermostat. Call service provider. Check continuity through thermostat leads, on temperature rise. If circuit does not open, replace the thermostat. Call service provider. Check electrical connections are correct. Call service provider.

FN8135E - Single Tank Fryer - Manual

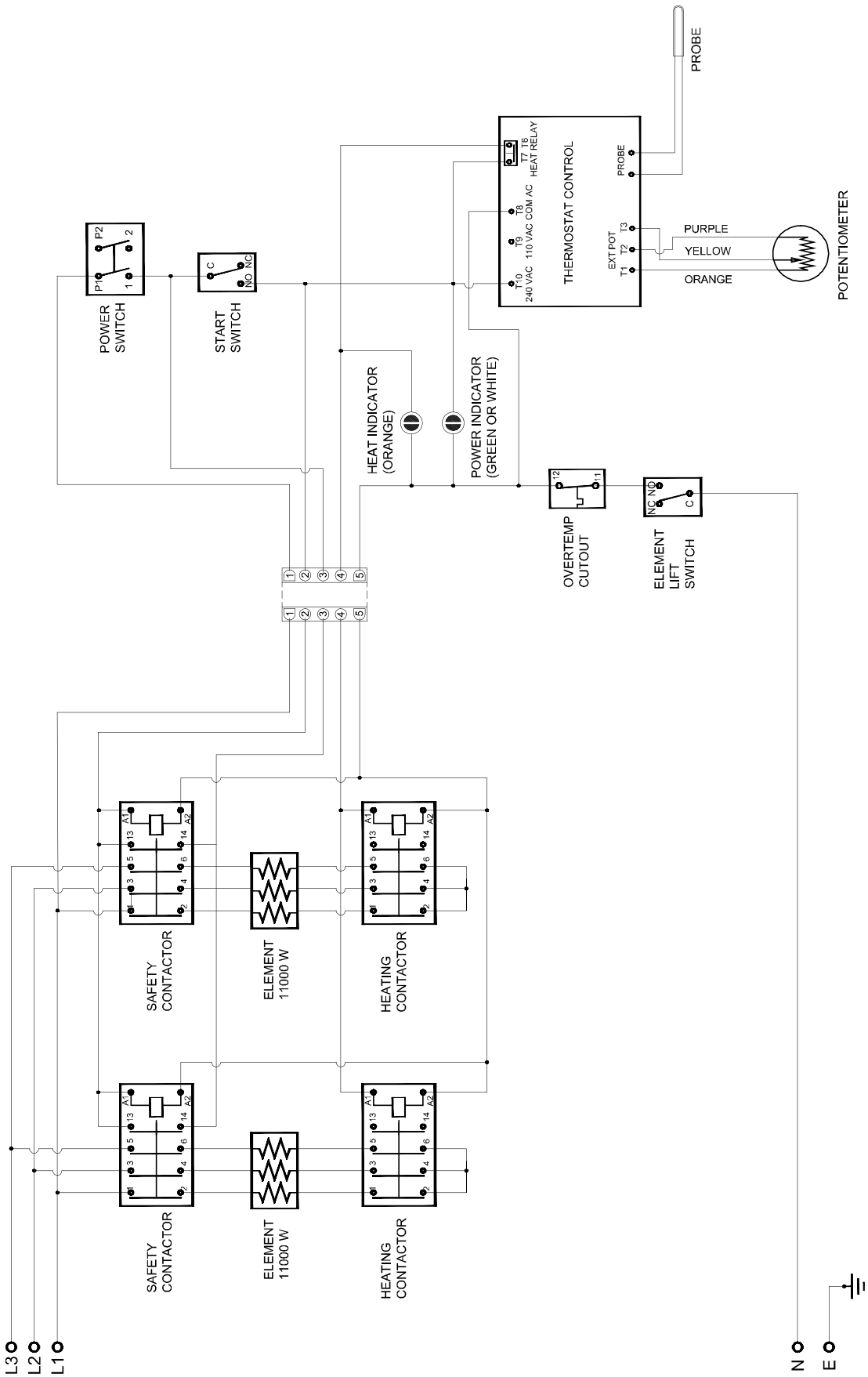

FN8235E - Twin Tank Fryer - Manual

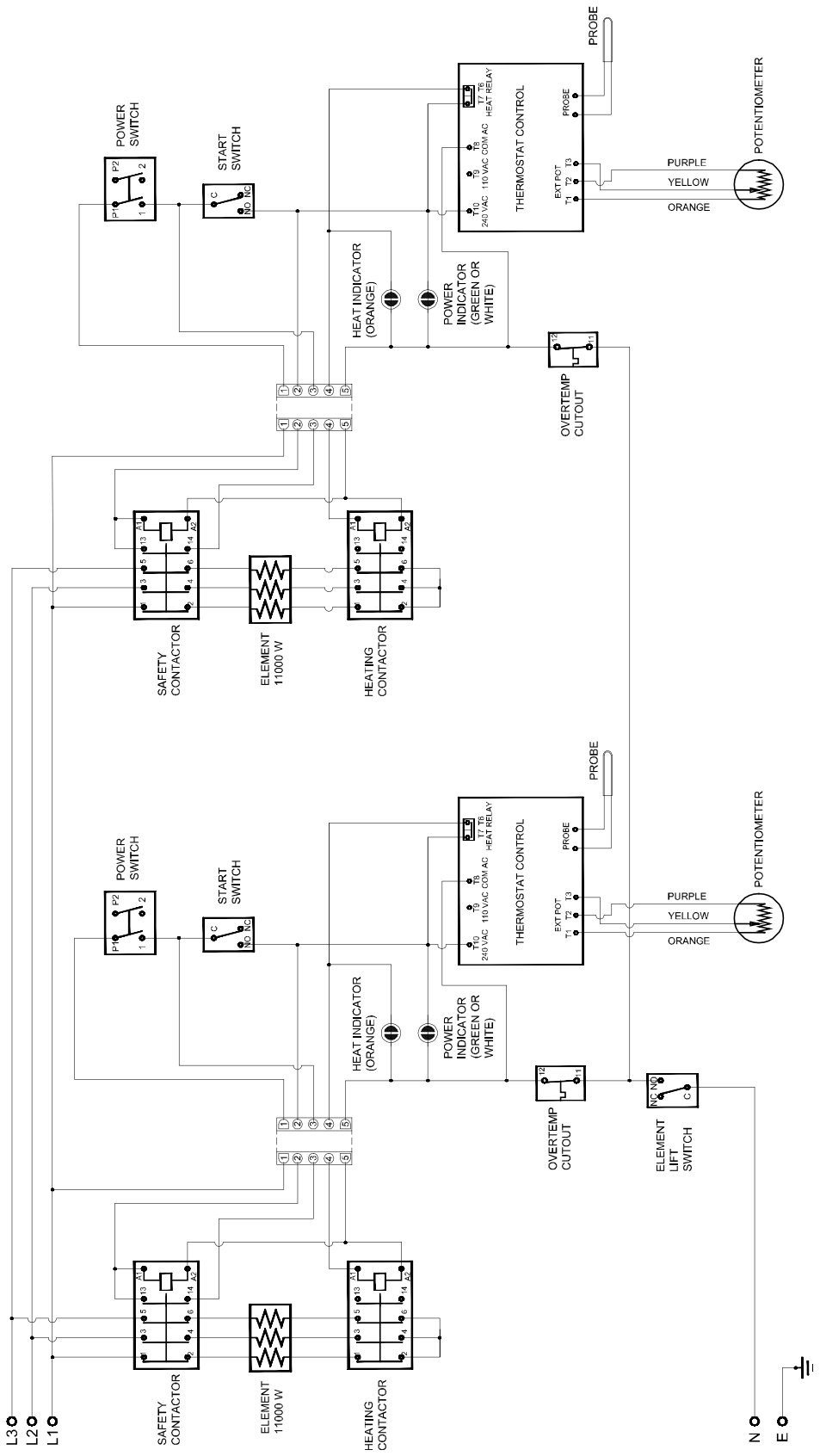

FN8135EE - Single Tank Fryer - Digital

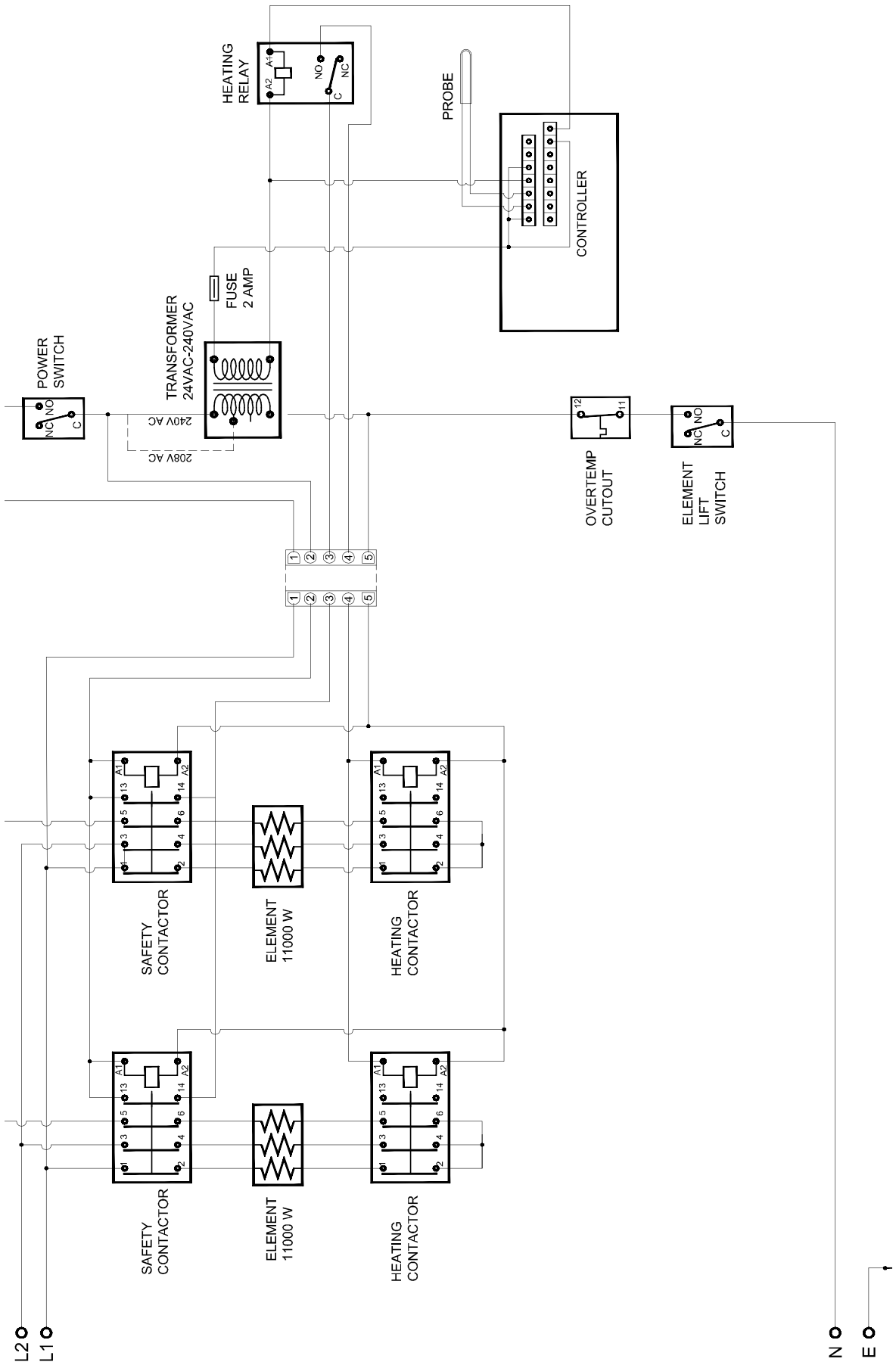

FN8235EE - Twin Tank Fryer - Digital

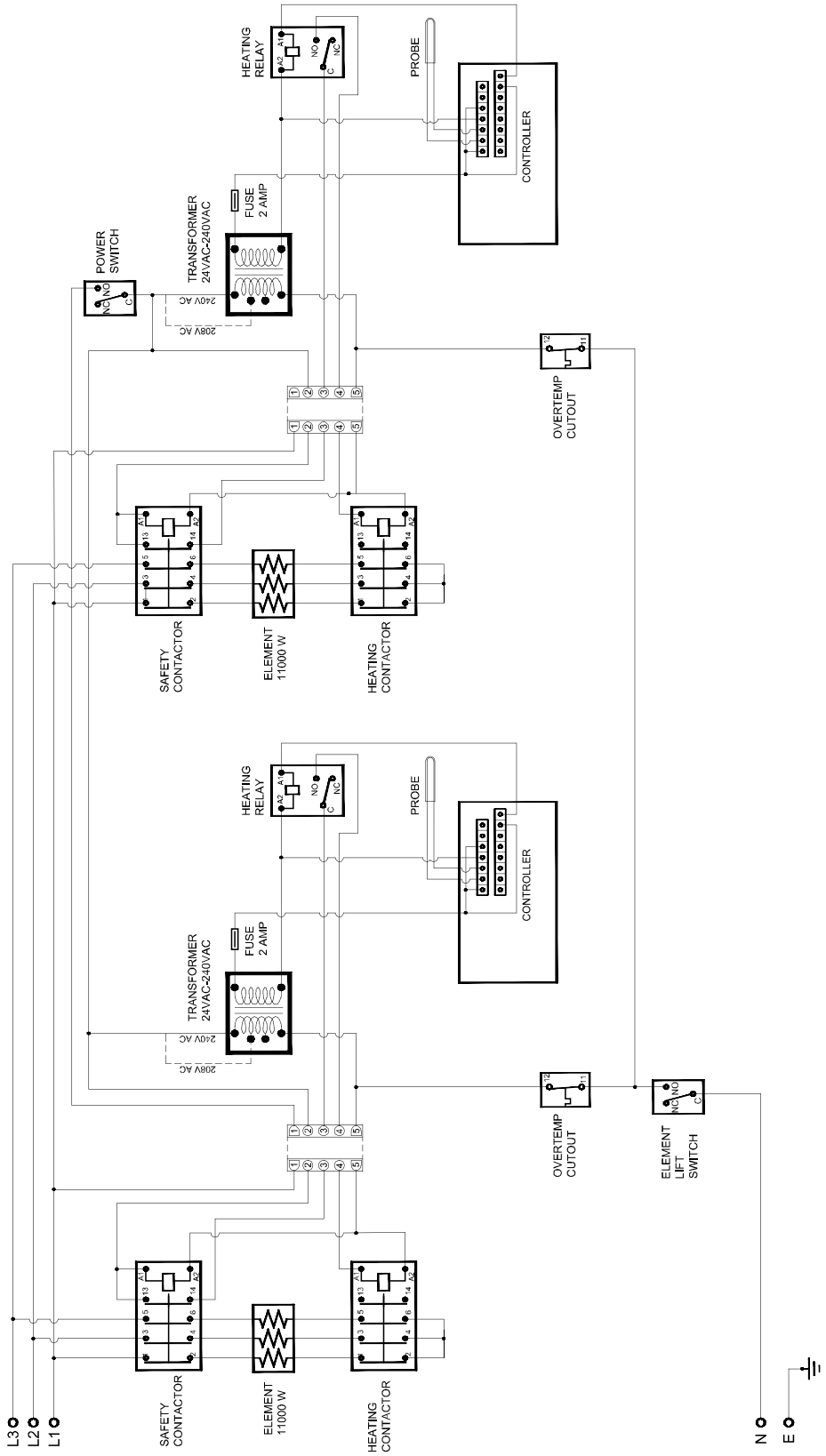

FN8135E - Single Tank Fryer - Manual

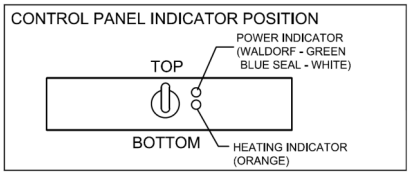

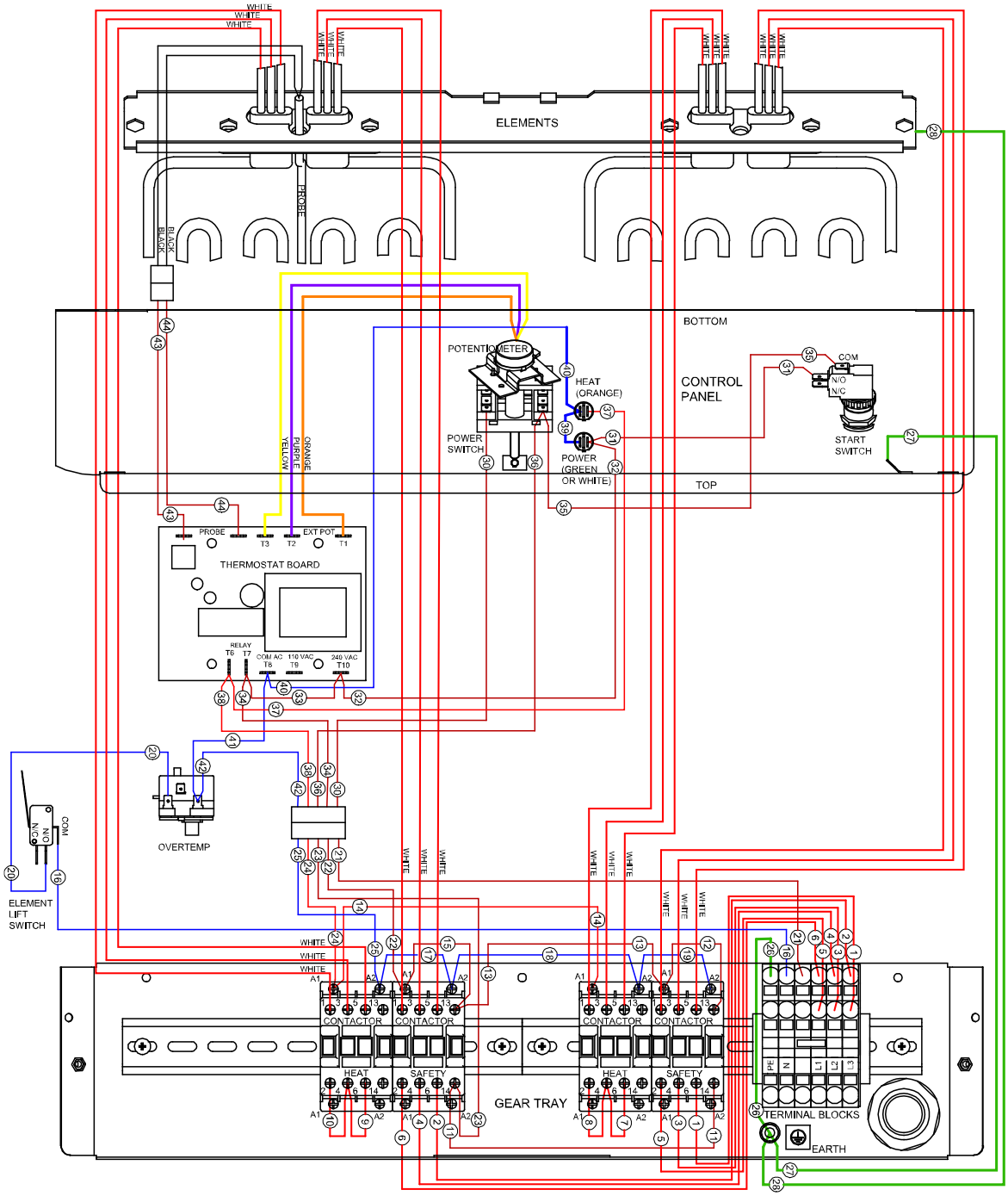

FN8235E - Twin Tank Fryer - Manual

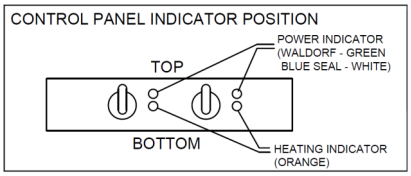

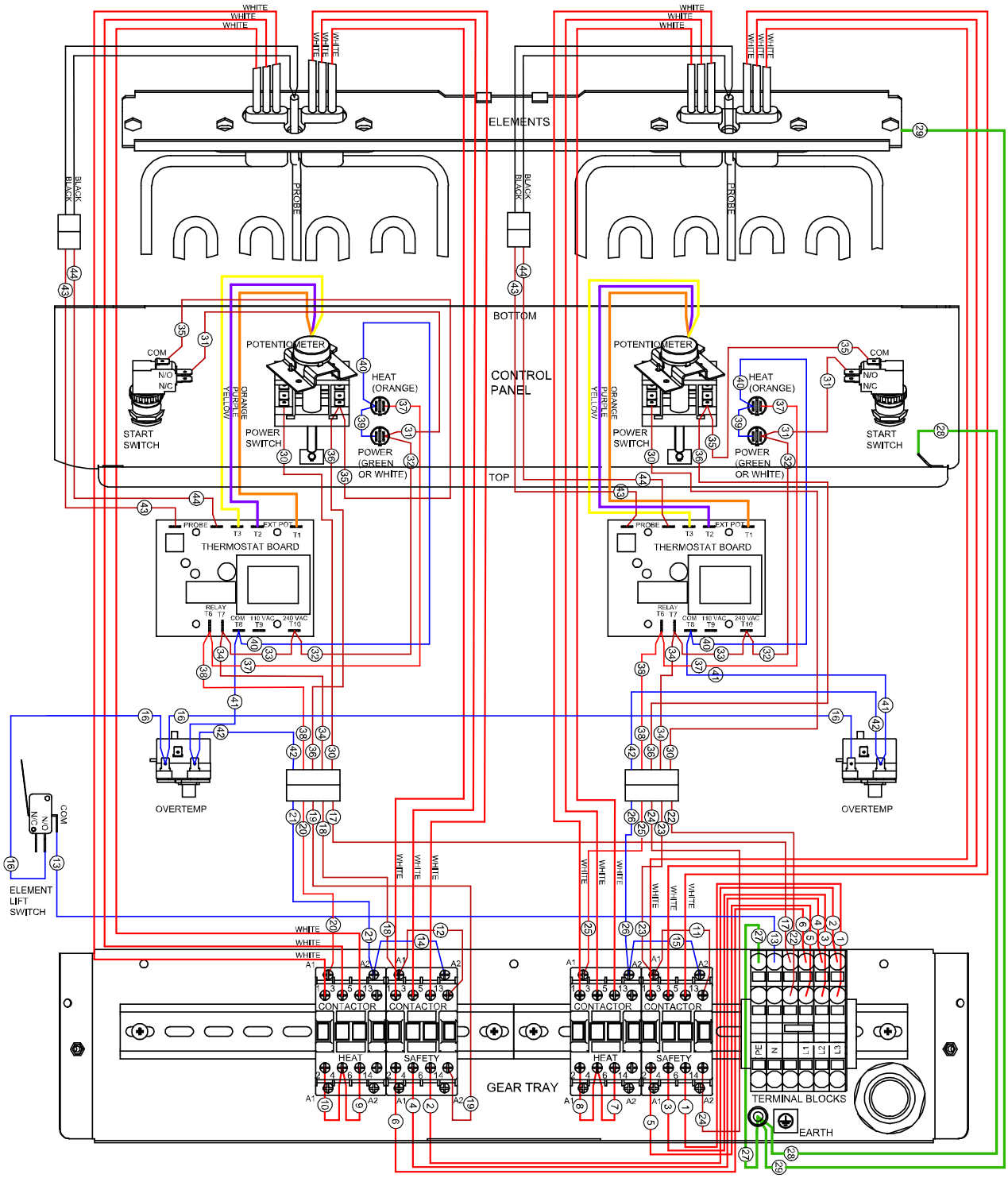

FN8135EE - Single Tank Fryer - Digital

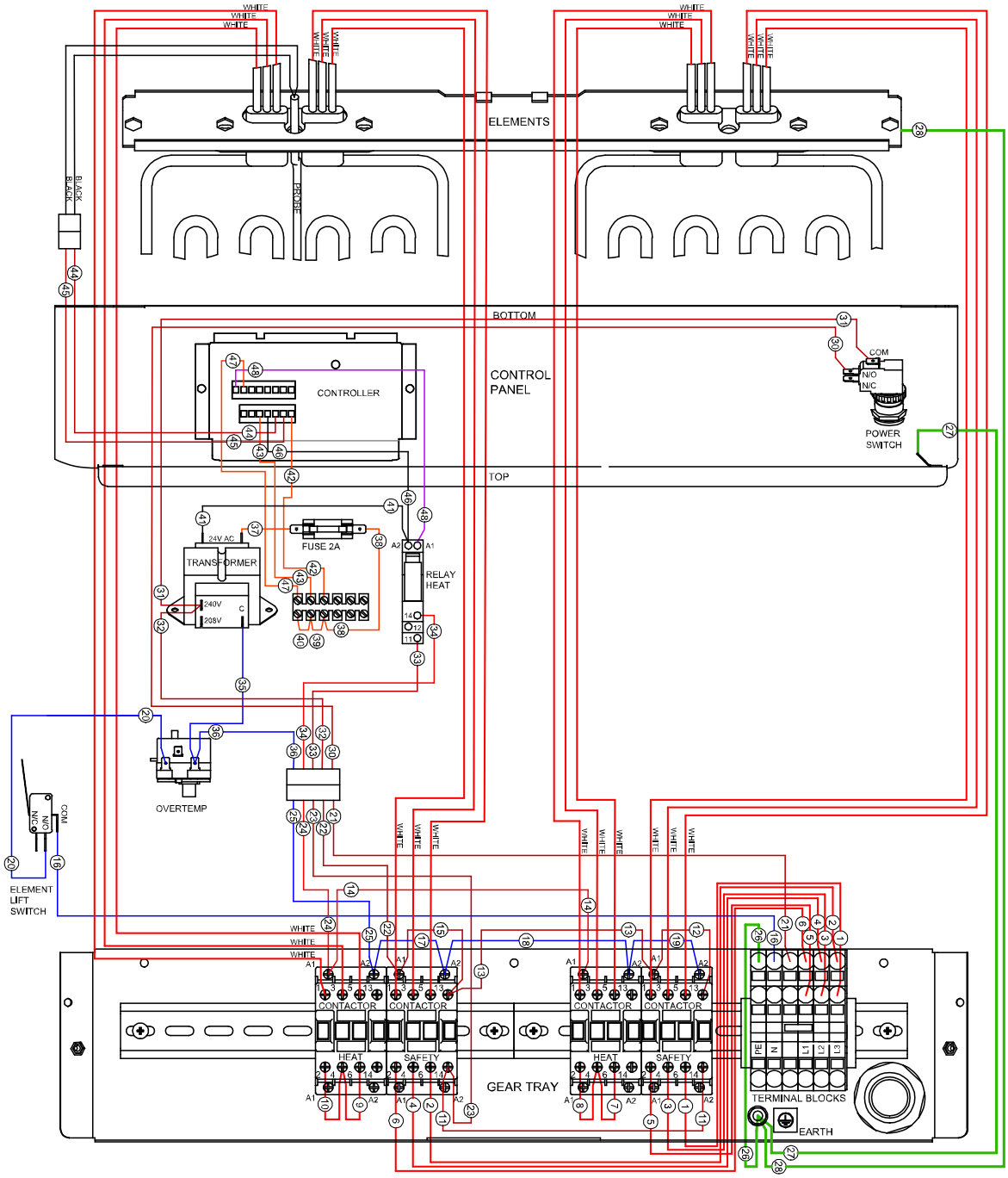

FN8235EE - Twin Tank Fryer - Digital

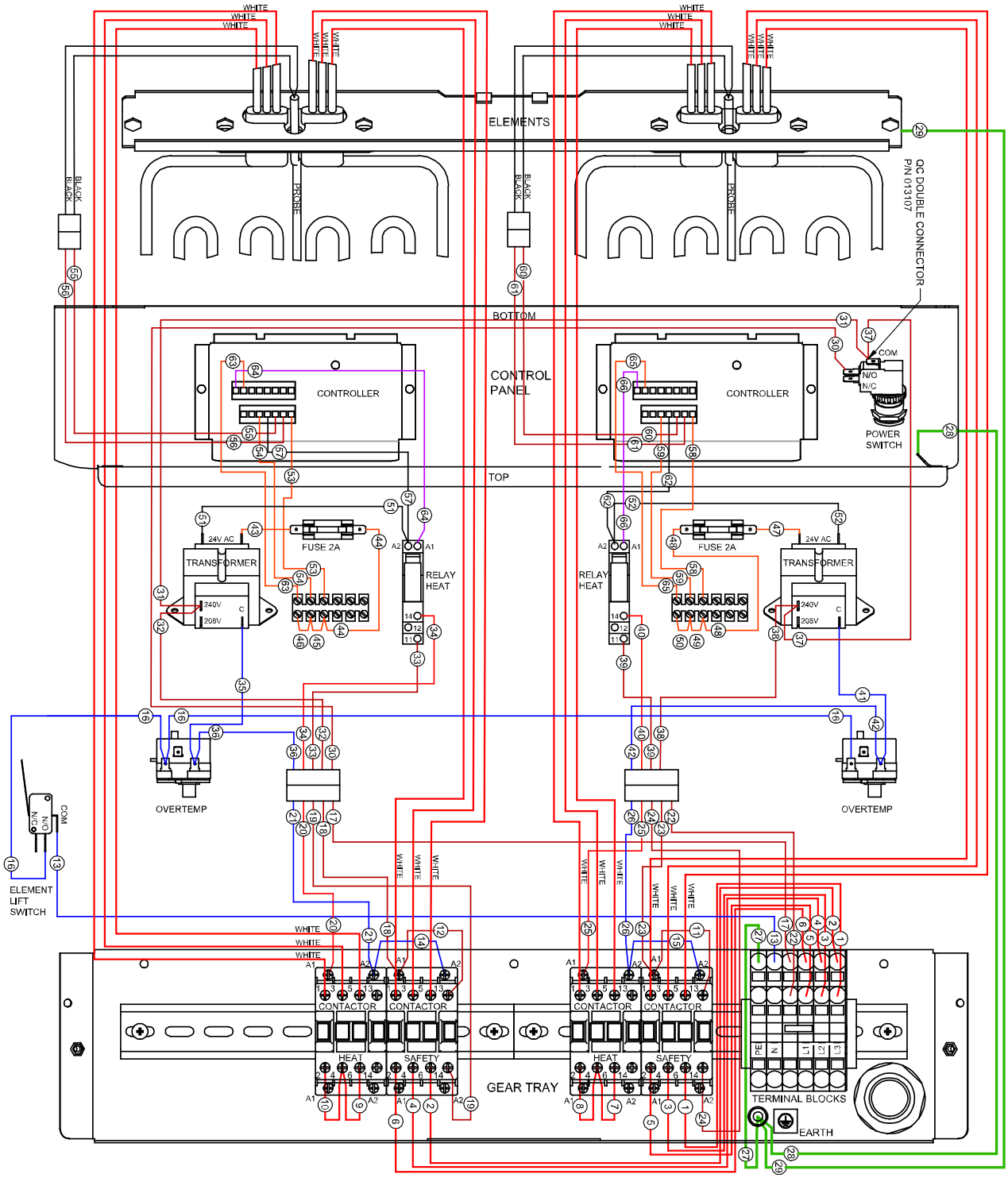

The following Parameters can be accessed and adjusted in the Advanced Programming Mode:-

- **Timing Mode (Straight or Flexi cook time).**
- **Temperature Offset (Calibration Setting) -14° to +14°.**
- **Temperature Display Mode (Temp display or prompt display).**
- **Programming the Melt Cycle.**
- **Setting the Temperature Units (either °C or °F).**
- **System Programmable Default Settings.**

NOTE: Ensure that the Controller ON/OFF switch is 'ON' and the controller display is illuminated.

1. Press the 'ON / OFF' Key to turn 'ON' the fryer controller.

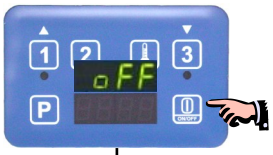

2. Press Programme Key 'P' and 'Timer 1' Key together to enter 'Advanced Programming Mode'.

3. **If 'LoC' is displayed**, password protection is turned 'ON' and control panel is locked. Unlock the control panel, refer to 'Controller Basic Programming Mode' - 'Entering the Controller Basic Settings', and repeat from Item 2 above.

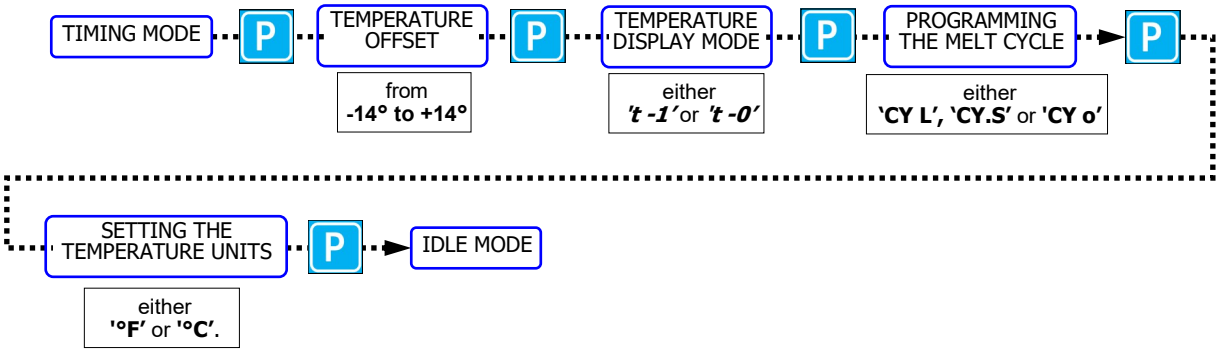

Timing Mode

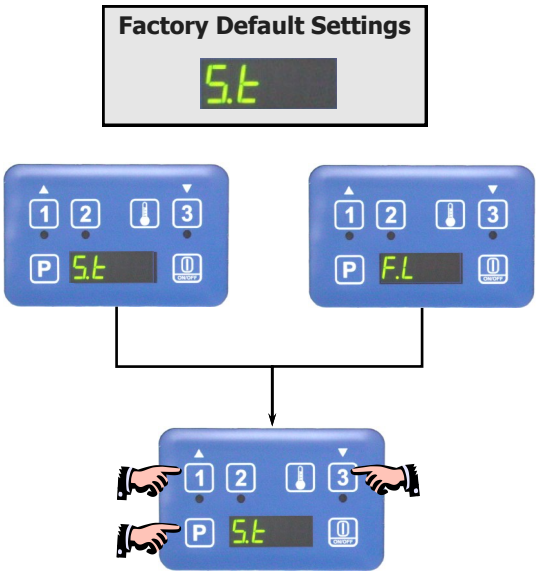

1. One of the following options will display:-

   Straight Cook Time
   Straight cook time refers to real time cooking.

   Flexible Cook Time
   Cook time can be automatically adjusted to compensate for size of load being cooked.

2. To change 'Timing Mode', press either 'Timer 1' or 'Timer 3' Key.
3. Press Program 'P' Key to confirm options, the change will be accepted and display will step on to '**Temperature Offset**' parameter.

Temperature Offset

Factory Default Settings
0°

The display temperature can be adjusted by between -14° to +14°.

To Calibrate the Control Temperature

- Set control temperature to 180°.
- Measure the oil temperature that the control is cycling at.
- If oil temperature is ***higher*** than the reading shown on the control panel, enter a ***positive*** value of the difference between the oil temperature and the set temperature (170° + difference).
- If oil temperature is ***lower*** than the reading shown on the control panel, enter a ***negative*** value of the difference between the oil temperature and the set temperature (170° - difference).

1. Temperature offset will appear on the screen.
2. To change temperature offset option, press either 'Timer 1' or 'Timer 3' Key to change selection.
3. Press Program Key 'P' to confirm the change and the display will step on to '**Temperature Display'** parameter.

Temperature Display Mode

Factory Default Settings
t. -0

Temperature display can be set for either of two display modes:-

't - 1' - *Display will show oil temperature as an actual temperature.*

't - 0' - *Display will show one of the following temperature status;*

'HEAt' *- Awaiting for fryer to heat up to set temperature.*

'droP' *- When fryer is within* 10° of set temperature to indicate that fryer is ready for loading.

1. One of the following options will display:-
2. Press either 'Timer 1' or 'Timer 3' Key to select option required.
3. Press Program Key 'P' to accept the change and display will step on to the **'Programming the Melt Cycle'** parameter.

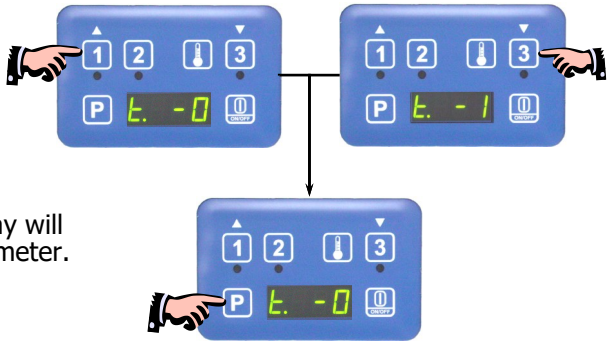

Programming the 'Melt Cycle'.

1. One of the following 3 options may be selected:-

   - **'L' (Liquid).**
   - **'S' (Solid).**
   - **'O' (Override).**

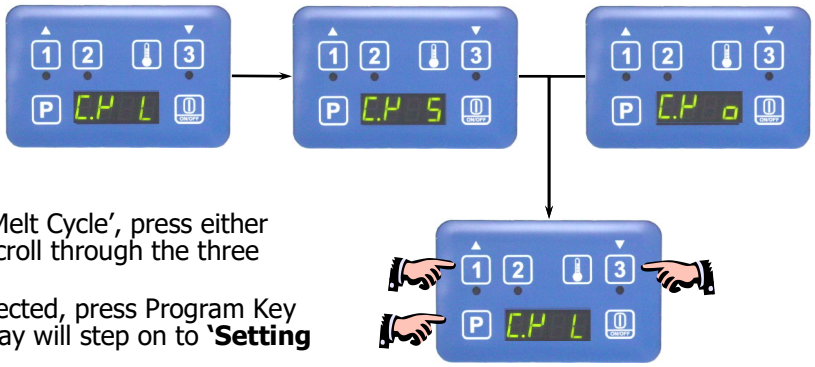

2. To change the programmed 'Melt Cycle', press either 'Timer 1' or 'Timer 3' Key to scroll through the three options.
3. Once the desired option is selected, press Program Key 'P' to accept the change, display will step on to **'Setting the Temperature Units'**.

Setting the 'Temperature Units'.

1. User may select from 'F' (Fahrenheit) or 'C' (Celsius).
2. Press either 'Timer 1' or 'Timer 3' Key to change selection.`
3. Press Programme 'P' Key , the change will be accepted and display will revert to **'Idle Mode'**.

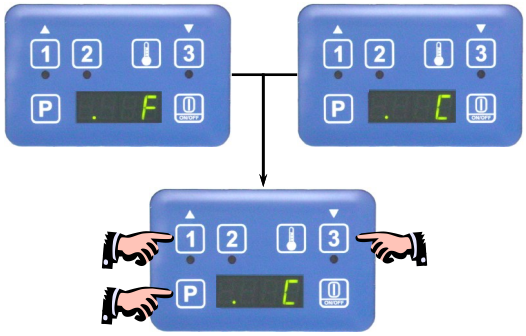

NOTE:

- **Pressing and holding Programme 'P' Key for approximately 3 seconds (Or not pressing any keys for 2 minutes) during Advanced Programming Mode, the appliance will exit Advanced Programming Mode and return to Idle Mode.**

System Programmable Default Settings

The table below shows a list of the programmable parameters and the default settings for this appliance. These settings can be edited from the Control Panel when in either **'Controller Basic Programme Mode'** or **'Controller Advanced Programming Mode'**.

Programmable Default Settings	
Controller Basic Programming Mode	**Default Settings**
Timer 1 'L' Cook Time	3:00 min.
Timer 2 'Ctr' Cook Time	3:00 min.
Timer 3 'R' Cook Time	3:00 min.
Temperature Set Point	177°C (350°F).
Keypad Lock or Unlock	Unlock.
Controller Advanced Programming Mode	**Default Settings**
Timing Mode	S.t (Straight).
Temperature Offset	0°.
Temperature Display Mode	t. -0 = 'HEAt' or 'droP'.
Melt Cycle Mode	L (Liquid).
Degrees; °F or °C	°C.

Replacement Parts List

IMPORTANT:

Only genuine authorized replacement parts should be used for servicing and repair of this appliance. Instructions supplied with parts should be followed when replacing components.

For further information and servicing instructions, contact your nearest authorized service branch (contact details are as shown on reverse of front cover of this manual).

When ordering replacement parts, please quote the part number and the description as listed below. If the part required is not listed below, request the part by description and quote Model and Serial Number which is shown on the rating plate.

Part No	Description	FN8135E	FN8235E	FN8135EE	FN8235EE
227962	Neon (Green)	1	2		
227963	Neon (Orange)	1	2		
235357	Knob 6mm 60-190°C	1	2		
247287	START switch (Momentary)	1	2		
247589	ON / OFF switch (Latching)			1	1
024018	Overtemp Thermostat	1	2	1	2
020256	Reset Relay 24V AC			1	2
229685	Temperature control	1	2		
233887	Rotary Switch	1	2		
234151	Potentiometer	1	2		
024802	Door Microswitch	1	1	1	1
013977	Door Microswitch Insulator	1	1	1	1
248592	Fryer Element 11 KW	2	2	2	2
248717	Temperature Probe	1	1	1	2
235698	Transformer 24Vac			1	2
229033	Fuse Holder			1	2
020109	Fuse 2 Amp			1	2
228264	Digital Controller			1	2
229076	Controller Overlay (3 Basket / Timer)			1	2
231739	Contactor	4	4	4	4
025948	Terminal Block - 6 Way			1	2
248439	Terminal Block 10 mm^2 Gray	4	4	4	4
248440	Terminal Block 10 mm^2 Blue	1	1	1	1
248441	Terminal Block 10 mm^2 Earth	1	1	1	1

General

018019	Basket (Standard).	3	3		
023220	Basket (Large)			2	2
227856	Door Magnetic Catch.	1	1	1	1
227459	Door Handle	1	1	1	1
236795	Drain Valve.	1	2	1	2
021885	Drain Extension.	1	1	1	1
248567	Fryer Lid.	1	1	1	1
015279	Lid Handle (Black)	1	1	1	1
240534	Leg Adjustable - 150mm (Front)	2	2	2	2
227850	Leg Adjustable - 150mm (Rear)	2	2	2	2
229674	Rear Roller Assy	2	2	2	2

Accessories

249152 Plinth Kit - 600mm (Electric Fryer).

Splashguard

Fryer
To Cooktop Open Burners.
To Target Top.
To Cooktop Electric.
LH (Part No. 249137).
RH (Part No. 249138).

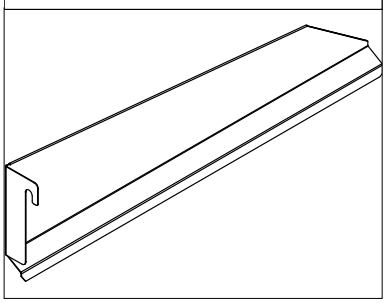

Drain Adaptor
(Part No. 024705).

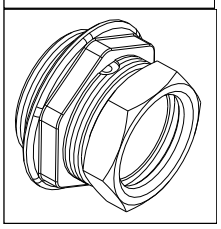

Drain Extension Kit
(Part No. 024710).

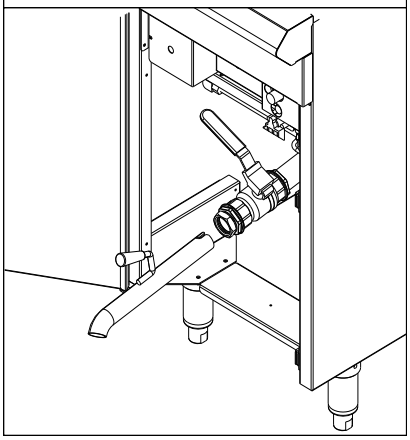

Joining Strip
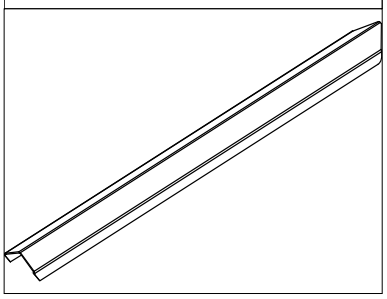
Fryer
To 600 Electric Fryer (Part No. 249136).