OPERATIONAL

TECHNICAL MANUAL

B-Smart Shuttle

BURLODGE

Table of Contents

Page

1. GENERAL SAFETY INFORMATION

This manual constitutes an integral part of the Shuttle Trolley belonging to the B-Smart System. The instructions provided will facilitate:

- correct installation
- problem-free operation
- proper maintenance of the Shuttle Trolley.

The measures specified by Burlodge for the safe operation of the B-Smart System apply in their entirety. They are supplementary to, and do not affect, the national and international standards that apply at the installation location.
In particular, the user's attention is drawn to the following general safety measures:

- To guarantee the safe operation of the Shuttle Trolley and the Docking Station, the installation, operation and maintenance instructions provided in this User Manual must be followed at all times
- In cases of doubt, or if problems arise that are not dealt with in this User Manual, contact Burlodge, or one of its authorised sales partners or service centres
- The initial operation of the B-Smart Shuttle and all maintenance work on this unit must be left to technicians specifically authorised by Burlodge to perform these tasks.

The B-Smart Shuttle Trolley has been designed and constructed for the transport of trayed meals within healthcare environments and in accordance with HACCP hygiene standards. The B-Smart System responds to cook-chill or temperature maintenance feeding systems. Burlodge accepts no liability for damage to the Shuttle Trolley or damage or injury to persons or property arising from incorrect or improper use of the Shuttle Trolley.

Instructions of particular importance in this manual are characterized by the following symbols:

⚡ **Warning**. The type of warning is indicated by a symbol and explained in the accompanying text in more detail. Direct or indirect danger to life and limbs of the user and / or third parties when the instructions are not followed precisely.

⚠ **Caution** The type of caution is indicated by a symbol and explained in the accompanying text in more detail. Potential risk of injury or damage to property when the instructions are not followed precisely.

Read Operator's Manual before using this product.

2. APPLIANCE DATA

TYPE OF DEVICE:	ENCLOSED TROLLEY FOR THE TRANSPORT OF MEALS ON TRAYS
MODEL:	B-SMART SHUTTLE BLDM0C.000 Short Shuttle BLDM0L.000 Long Shuttle
MANUFACTURER:	Burlodge Srl Via Ca' Bertoncina No. 43 24068 Seriate (BG) – Italy Tel. 0039 035 4524900 Fax 0039 035 302994

3. TECHNICAL DATA

Tray capacity:	External dimensions:
20 or 24 or 36 Smart trays	approx. 794 x 890 x h 1400 mm
30 or 36 or 48 Smart trays	approx. 794 x 1208 x h 1400 mm

Tray dimensions:	FT 575 - 575 x 325mm FT 530 - 530 x 325mm Smart tray - 575 x 243mm
Foam:	Insulation made of bicomponent polyurethane foam free of any fluorinated gases (No HFC)
Maximum weight of tray:	approx. 3.5 kg for FT trays & 3kg for Smart Tray (complete with tray, food and chinaware)

Empty trolley weight:	
20 or 24 or 36 Smart trays	approx. 140 kg and maximum carrying weight of 108kg
36 or 48 Smart trays	approx. 181 kg and maximum carrying weight of 144kg

4. DESCRIPTION OF THE B-SMART SHUTTLE TROLLEY

The B-Smart Shuttle has been designed for use in hospitals and care homes. The B-Smart System consists of the Shuttle and a Docking Station. The Shuttle is used as a means of transport from the kitchen to the location where the Docking Stations are installed. Only Burlodge trays must be used, together with most types of china as long as covered with appropriate high-heat temperature lids when using in the oven section.

The Shuttle's chassis is made entirely of WNr.1.4301 (18/10 AISI 304) stainless steel. In addition, the Trolley features the following components and operating functions:

1. Lower bumper made of hard wearing plastic
2. Top-surface stainless-steel galley rail around all four sides. The rail, which is attached to the trolley by plastic corner fixtures, keeps serving utensils or other goods to be transported from falling off the top surface of the Shuttle during transport. Maximum weight carried by the top = 15kg
3. The Shuttle is fitted with 4 doors, 2 at the front and 2 at the back, for either the hot or cold sections. The back being the side that docks to the Station. Each door is fitted with a lower magnetic catch and a sliding top latch

Caution

- The sliding top latch MUST BE applied at all times when the doors are closed. Failure to do so may cause doors to open during transportation, when docking or during the heating and cooling cycles

4. The doors have a two position stay-open catch: 270° for service, storage and docking and 255° for tunnel washing as this leaves enough space to clean behind the door

Caution:

- Never leave doors at 255° during service as the door protrudes from the bumper which can cause either injury to the operator or damage to the trolley

5. The Shuttle is fitted with perimeter colour-coded frame gaskets. The door is fitted with vertical gaskets that meet the central partition. These ensure a tight seal between Station and the Shuttle when docked. All these gaskets can be removed without tools for the easy cleaning (refer to cleaning section).

Caution:

- Ensure that gaskets are always applied properly and are fitted to the doors and Shuttle at all times. Failure to do so may affect performance of the trolley and possibly cause damage to the Shuttle

6. The Shuttle is insulated with high density HFC free polyurethane foam insulation and is divided by a thermal barrier. All corners and radiuses are rounded for easy cleaning
7. The wire tray supports are fitted onto the ventilation panels and can be removed for cleaning by lifting them out. Ensure that, when repositioning, all wire hooks are engaged
8. Two ventilation panels are fitted onto the sides and can easily be opened or removed for deep cleaning. To open the ventilation panel, on the back of the Shuttle, both at the top and bottom, the two black locking mechanisms need to be disengaged by sliding them backwards. To remove, open the panel fully (up to the shutter wall) and lift up and pull out
9. The shutter wall slides in one piece in the centre of the trolley and acts as a thermal barrier between the two compartments. Every dividing block is fitted with a shutter which closes when a tray is not present in order to prevent heat transfer between the two chambers
10. The wall can only be inserted from one side (front side) and is secured in position by closing the hooks underneath the thermal barrier (picture shows open position). Ensure the top and bottom are both in the closed position
11. The bumper has recesses to facilitate the brake application. Trolleys should always be braked when parked and or not in use.

Caution:

- Please ensure that when removing the wall it is supported from the centre and is not dropped on its extremities as this may damage the shutter wall.

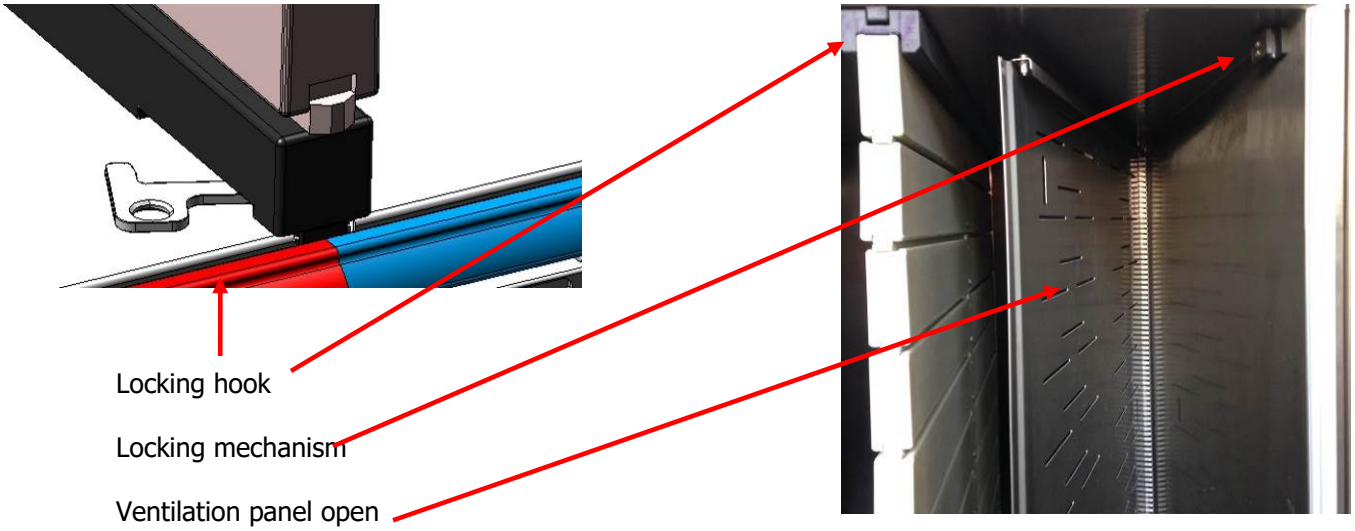

5. INSTALLATION

a) Unpacking

1. Remove outer box and inner packaging
2. Remove batons which are holding the wheels in position on the pallet
3. Lift or roll Shuttle off the pallet carefully by means of a ramp
4. All packing must be disposed of in compliance with local laws and regulation.

Caution:

- Ensure that no damage is caused to persons or to the trolley by using a ramp or by following manual handling local safety guidelines.

6. TRAY LOADING

In order to ensure good quality results in temperature, the trays need to be loaded into the Shuttle wall correctly.

Proceed as follows:

1. Open doors fully and ensure that the stay open catch is engaged
2. Load the tray with the items to be heated on the correct side. Ensure the trays are fully inserted
3. Close doors and slide top latch to secure closing.

Caution:

- Ensure that trays are correctly supported by both wires support
- On some Shuttles, two trays can be loaded on the same side. DO NOT postion a tray in between two shutters, ie in the middle, as this will lift the shutters, creating an air gap during regeneration and effecting temperatures
- Ensure that there are no items between the tray and the shutter.

7. DOCKING

Proceed as follows in order to dock the Shuttle to the Docking Station:

1. Fully open the two back doors (opposite to push handles)
2. Align the Shuttle to the Station using the alignment pins on both the docking Station and the Shuttle until the docking guide engages (approx. 10cm distance). The green LED will activate
3. Dock the Shuttle by gently pushing it against the Docking Station. The green LED will activate if correctly docked and the control panel will switch on
4. Apply the brakes. Once connected, the Station will start operation automatically.

Note:

- Do not slam Shuttle against the Station
- Ensure that the Shuttle is air tight with the Station.

Caution:

- Always connect the Shuttle to the Station from the front, i.e. push handle bars and not the opposite way round. Incorrect docking could cause damage to the Station and/or the trolley
- Ensure the doors are open when connecting; failure to do so will cause damage to both the Shuttle and the docking Station.

8. TOWING SYSTEM (optional)

The towing system for Shuttle Trolleys has been designed for the towing of up to a maximum of 3 trolleys at any one time at a speed of

MAX 4 Km/h.

Note:

- Possibility to tow more than 3 trolleys may be arranged depending on towing conditions and towing route; please contact Burlodge to discuss further.
- The tow bar consists of two brackets with holes fitted on the trolleys (one back, one front) and a removable arm.

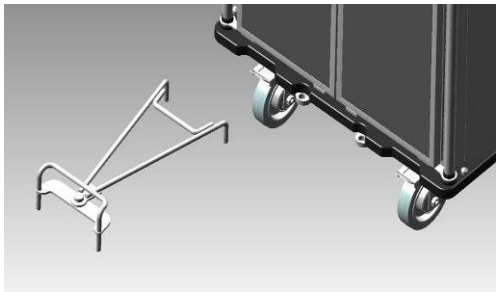

To apply the tow bar please proceed as follows:

1. Position two trolleys to be towed close to each other
2. Locate the A-frame with the pivoting section of the tow bar arm first as the pins are longer. It should be located into the tow bar brackets on the push side of the Shuttle
3. Insert the A-frame bracket pins into the brackets on the next trolley. This side of the tow bar arm should be located where the magnetic plate side is.

Caution:

- Always exercise the utmost care and attention when towing Shuttle Trolleys in public areas, especially when there are obstacles and pedestrian traffic in the vicinity.
- The trolleys must always be coupled and uncoupled on a flat floor surface that is free from obstructions.
- The towing speed must never exceed 4 km/h.
- The towing speed must be reduced to a minimum when:
  - Being towed through a narrow passageway.
  - Floor surfaces are wet, slippery or uneven.
  - There are pedestrians or other vehicles in the vicinity.
- Always double-check that all trolley doors are securely closed, including the sliding latch.
- Always double-check that all trolley wheel brakes are unlocked.
- Always travel as slowly as possible on downward gradients.
- Always avoid sudden starts, jerky braking and sudden changes of direction when towing trolleys.

9. TRANSPORT IN TRUCKS

The Shuttles can be transported as long as proper consideration is taken in ensuring that the transport vehicle is apt to do so.
A dedicated optional kit consisting in high density plastic blocks - which are factory installed as indicted below to prevent trolleys from colliding against with each other and to prevent damage to the shuttles

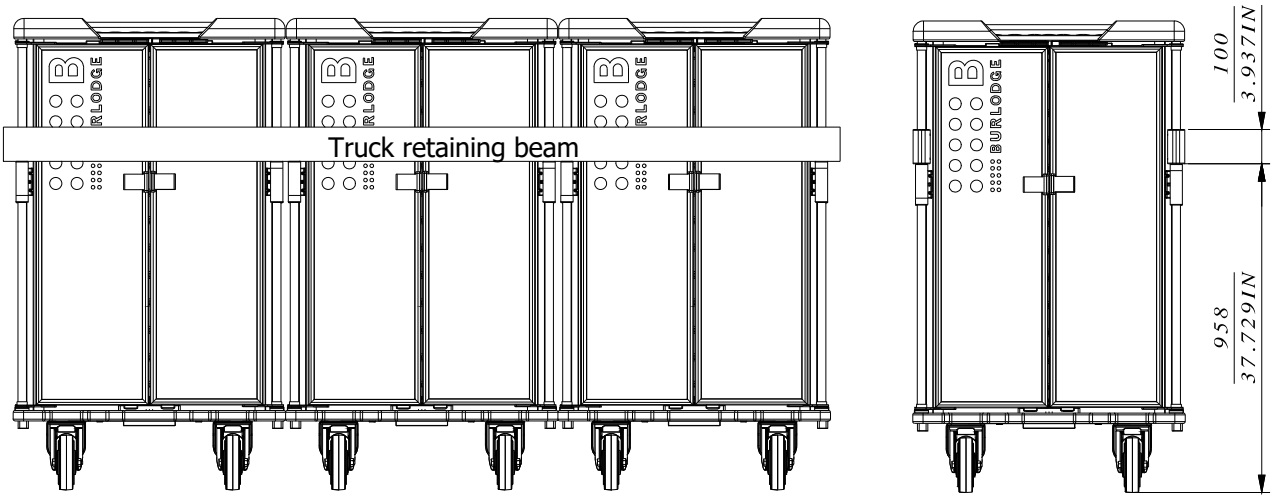

Note:

- Always apply the brakes also when using the retaining beam.
- The last row of Shuttles must always be immobilized with the horizontal retaining beam. The transport truck/van model must be equipped with built-in rails to provide a safe and effective fastening of the retaining beam.
- The retaining beam should be made of a material which will not damage the trolley, or be protected with dampening pads.
- DO NOT USE STRAPS TO SECURE SHUTTLES

- The truck/van floor surfaces and the surfaces of any loading device must be checked that will not cause wear and tear to the trolley casters tread.
- The truck/van must be fitted with side internal bumpers to meet those of the Shuttle - NO parts in truck/van should protrude and potentially cause damage to the Shuttle.
- When different products or equipment are transported together with the Shuttle trolley, an analysis has to be done to prevent interferences, which may damage the trolleys and the other products.
- The route for the transportation of the Shuttle trolleys must be inspected and selected avoiding speed bumps, tram rails, railway crossings, steep ramps and irregular surfaces. A procedure describing the route, speed, loading/unloading directions and safety requirements should be prepared and made available to any driver in charge.
- Even with a robust and sturdy construction, road transport vibrations can cause the loosening of joints and alignments in the trolley. Transported Shuttle trolleys require regular preventive maintenance in the form of periodical check of critical points and fastening/ realignment as needed. This can be done by stipulating a Service contract, or developing a checklist for internal servicing.

10. REGULAR CHECKS

In order to ensure correct operation of the Station, regular visual checks should be carried out. Refer to the list below for examples of the recommended items to be checked:

COMPONENT	ACTION REQUIRED	FREQUENCY
Wheels	Check that • The brakes are working properly • The wheels are undamaged	Every three months
Shutter wall	Check that • All the shutters are in the down position when trays are not interested • The locking hooks are engaged	Weekly
Door Latches	Check that • The door magnetic catch engages • The sliding catches correctly engages with the door retaining block	Weekly
Gaskets	Check that gaskets • Are correctly fitted • All seals/gaskets are free from damage	Every six months

11. CLEANING

The Shuttle is designed for washing with water jets or in a tunnel washer. Once sanitized, it is advised to dry the parts that are still wet with a damp cloth and, if necessary, leave the doors open to dry completely.

Pressure washing:

- Maximum temperature 60°C
- Pressure 80 bar
- Minimum distance of nozzle to trolley 50 cm.

Please contact Burlodge to confirm the suitability of your tunnel wash facilities.

Daily cleaning routines:

1. Move the trolley to a safe area before cleaning
2. When required, the silicon gaskets can be easily removed. Remember to do this one section at a time and remember which one goes where! Always remove the silicon gasket by pushing on its back edge and never by pulling on its thin front edge or on corners
3. Use a hot soapy solution to wipe both compartments, then rinse with water. Cleaning solutions

should be food safe and must be thoroughly rinsed and wiped dry

4. All exterior panels can be cleaned with hot soapy water and rinsed with clean water.

Caution:

- Do not use any abrasive or caustic products for cleaning. Use of these products will permanently damage the components and surfaces of the trolley. The pH of the products used must be within 6.0 and 8.0
- Failure to carry out daily cleaning may lead to discoloration of surfaces and silicon gaskets.

Cleaning Schedule after Every Meal Service:

COMPONENT	HANDWASH	SANITIZE	DISHWASH	JETWASH	POLISH	NOTES
Internal compartments	✓	✓	×	✓	×	Wipe dry after cleaning
Interior Surfaces	✓	✓	×	✓	×	Never use polish
Silicon Gaskets	✓	✓	×	✓	×	Can be left to soak before cleaning
Exterior St. Steel Panels	✓	✓	×	✓	✓	Use non abrasive hard surface cleaner
Trays	✓	✓	✓	✓	×	Do not use abrasive cleaning pads
Bumpers	✓	×	×	✓	×	Wipe dry after cleaning
Doors	✓	×	×	×	×	Use water and neutral detergent

Deep cleaning should be scheduled so that the trolley is maintained at the correct level of cleanliness. Under normal conditions, deep cleaning should be carried out at monthly intervals. This may be varied to suit site conditions.

Burlodge reserves the right to amend this Manual at its discretion.

Non-authorised changes to, or modifications of, the original design and operating features of the Burlodge System could lead to the violation of safety, health and/or environmental regulations, which could result in voiding the Declaration of Conformity and the Safety Mark carried by the equipment.