GAS

TECHNICAL DATA SHEET FOR **GP8121GEC**

WALDORF

GAS GRIDDLE ELECTRIC CONVECTION OVEN **1200mm**



GP8121GECL

Base model variants

GP8121GECL	**GP8121GECH**	Mild steel griddle plate
GP8121GECLCR	**GP8121GECHCR**	Chrome griddle plate
GP8121GECLR4	**GP8121GECHR4**	Mild steel griddle plate with 1/3 ribbed section
GP8121GECLCR4	**GP8121GECHCR4**	Chrome griddle plate with 1/3 ribbed section

- 20mm mild steel plate
- Angled plate adds grease drainage
- Mirror chrome and 1/3 ribbed plate options
- GN 2/1 6.6kW electric convection oven
- Drop down door

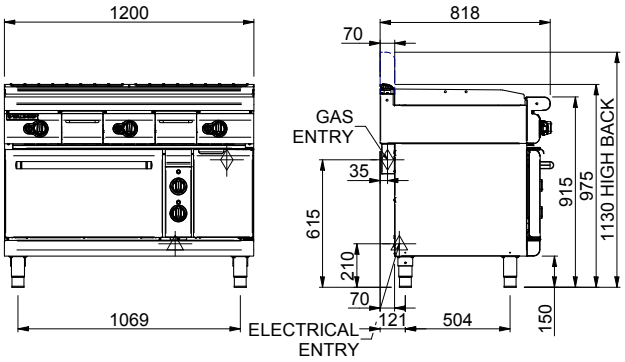

SPECIFICATIONS

Griddle

Burners 3 x 36MJ/hr / 9.5kW
3 bar burners

Oven

4.5kW bottom heating element
2.0kW top heating element
105W fan motor

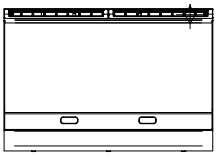
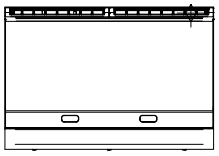
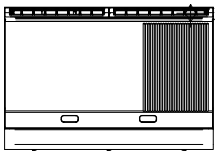
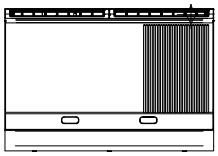

Power (by model)		**GP8121GEC**	**GP8121GECCR**	**GP8121GECR4**	**GP8121ECCR4**
Gas power	**AU / NZ** **UK-INT**	108 MJ/hr / 114MJ/hr 28.5 kW, 97,245Btu/hr			
Electric power		6.6kW			
Cooking surface area		1192mm x 530mm, 6318cm²			

Oven dimensions - Width 665mm Depth 590mm Height 335mm, Rack Size 655mm x 530mm, Rack positions 5

Gas connection - R ¾ (BSP) male. 130mm from RH side, 35mm from rear, and 616mm from floor. All units supplied with Natural and LP gas regulator.

Gas type - Available in Natural gas and LP gas. Please specify when ordering. Units supplied complete with gas type conversion kits.
Other gas types on request.

Electrical requirements - (1 phase connection) 6.6kW, 220-240V, 50/60Hz, 1P+N+E, 27.6A,
(3 phase connection) 6.6kW, 400-415V, 50/60Hz, 3P+N+E, L1 - 8.8A, L2 - 9.4A, L3 - 9.4A

Electrical connection - 77mm from RH side and 209mm from floor

Dimensions	**GP8121GEC**
Width	1200mm
Depth	818mm
Height	915mm 975mm (Low back) 1130mm (High back)
Weight	286kg

Packed data	**GP8121GEC**
Volume	1.429m³
Packed weight	317kg
Width	1260mm
Depth	900mm
Height	1260mm

Options -

Rear rollers
Castors
Splashguard
Plinth mounting
Kick panels
Joining caps
High back kit

AGA 6898 G

CE 2797 CE681450 UK CA

In line with policy to continually develop and improve its products, Moffat Limited reserves the right to change specifications and design without notice.

© Copyright Moffat Ltd
Waldorf.01.2026

ISO9001 Quality Management Standard

GAS

TECHNICAL DATA SHEET FOR **GP8121GEC**

WALDORF

GAS GRIDDLE ELECTRIC CONVECTION OVEN **1200mm**

GENERAL CONSTRUCTION

- Modular hygienic edge joining system
- Stainless steel construction
- Bull nose 2.0mm 304 stainless steel
- Front panels 304 stainless steel
- Front panels vitreous enamelled - Bold
- Control panel vitreous enamelled - Cue
- Low Back and High Back stainless steel with vitreous enamelled cast iron caps
- 2 stainless steel grease drawer for easy cleaning and handling

CONTROLS

- Ergonomic control knobs with panel bezel for easy view control setting
- 90-300°C thermostatic controls
- Pilot and flame failure protection
- Piezo ignition to each pilot burner
- Oven - 60-300°C thermostatic control and separate top heat Hi-Lo regulator
- Power and heating indictors
- Heating and fan auto-off when door is open
- Over-temperature safety cut-out

Griddle

- 3 independent cooking zones
- 3 x 3 bar chrome steel burners
- 20mm thick mild steel plate, fully seam welded
- Plate angled at front to aid drainage
- Grease trough and drain hole
- 2 large capacity grease drawers
- 1/3 (400mm) ribbed plate option
- Mirror chrome plate option
- 1/3 (400mm) ribbed mirror chrome plate option

Oven

- High speed 105W motor and 175mm stainless steel fan
- 2.0mm galvanised steel full chassis
- Vitreous enamelled fully welded GN 2/1 oven
- Heavy-duty cast iron even heat sole plates
- Drop down door with welded internal frame and pressed vitreous enamelled door inner
- Stainless steel braided oven door gasket
- Vitreous enamelled oven spill tray
- Heavy-duty chromed wire 4 position side racks
- 2 heavy-duty chromed wire oven racks
- RH side cabinet with door
- Stainless steel legs - adjustable 135-175mm

CLEANING AND SERVICING

- Easy clean stainless steel external finish
- Access to all serviceable parts from front of unit
- Easy clean vitreous enamelled oven and door inner
- Oven side racks and sole plates lift out for cleaning

INSTALLATION INCLUSIONS

- 70mm full width rear connection rebate
- Modular Joining Kit
- Attachment points for Bench Ends

ITEM CODES

1200mm Gas Griddle Range Electric Convection Oven

Gas range electric convection models supplied as Item Code **GEC**



LOW BACK HIGH BACK

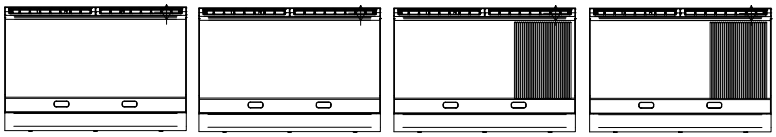

	Mild steel plate	Chrome plate	Mild steel plate w/ 1/3 ribbed	Chrome plate w/ 1/3 ribbed
Standard				
Low Back	GP8121GECL	GP8121GECLCR	GP8121GECLR4	GP8121GECLCR4
High Back	GP8121GECH	GP8121GECHCR	GP8121GECHR4	GP8121GECLCR4
CUE				
-C0 Cue vitreous enamel control panel colour finish *(see Cue colour code options)*				
Low Back	GP8121GECL-C0	GP8121GECLCR-C0	GP8121GECLR4-C0	GP8121GECLCR4-C0
GP8121GE	GP8121GECH-C0	GP8121GECHCR-C0	GP8121GECHR4-C0	GP8121GECHCR4-C0
BOLD				
-B0 Bold vitreous enamel full front colour finish *(see Bold colour code options)*				
Low Back	GP8121GECL-B0	GP8121GECLCR-B0	GP8121GECLR4-B0	GP8121GECLCR4-B0
High Back	GP8121GECH-B0	GP8121GECHCR-B0	GP8121GECHR4-B0	GP8121GECHCR4-B0

Standard Models Gas Type: Natural Gas add suffix **-N**, LP Gas Propane add suffix **-L**, Butane add suffix **-B**
CUE/BOLD Models Gas Type: Natural Gas add suffix **N**, LP Gas Propane add suffix **L**, Butane add suffix **B**

STANDARD COLOUR OPTIONS

- **BLACK** Cue -C0 Bold -B0
- **CHILLI RED** Cue -C2 Bold -B2
- **BURGUNDY** Cue -C3 Bold -B3

Designed and manufactured by

MOFFAT

In line with policy to continually develop and improve its products, Moffat Limited reserves the right to change specifications and design without notice.

© Copyright Moffat Ltd
Waldorf.01.2026

ISO9001 Quality Management Standard

an Ali Group Company

GROUP

The Spirit of Excellence