Viking 4G Electric Static Jacketed Kettle

Viking 4G 200E (4224110)

Standard Features

- 200 litre capacity
- Electric heated version
- Elevated control pillar with selected features
- Electromechanical controls
- Stepless temperature control
- Electric tilting – tilting height 600mm
- Auto tilt-back
- Measuring stick
- Retractable handshower
- Strainer plate
- Stainless steel construction
- Unit shown includes free standing floor kit - other options available

Please refer to Moffat price list for options and accessories

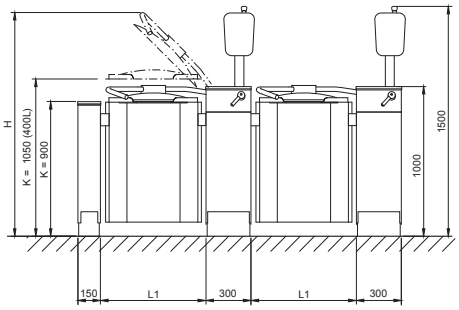

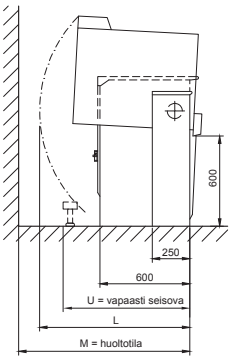

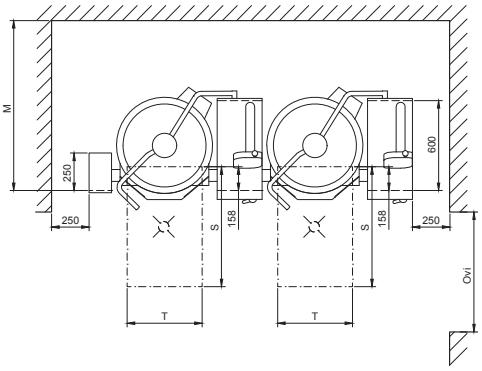

Technical Data

Net Volume	200 L
Spare Volume	19 L
Gross Volume	219 L
Dimensions	
Width	1360mm
Height	1500mm
Depth	880mm
Connections	
Water	Cold ø15mm Hot ø10mm

Electrical	Power 30 kW Voltage 400-415V, 3P+N+E 50/60Hz AMP 50A
Total Heat	30 kW
Load	Latent 1.4 kW, Sensible 6.1 kW
Waste	By kitchen contractor
Nett Weight	290 kg

Model	L1 mm	H mm	L mm	M mm	U mm	T mm	Door mm
200E	**910**	**1945**	**1075**	**1170**	**1110**	**600**	**1000**

Australia
moffat.com.au

Moffat Pty Limited
740 Springvale Road
Mulgrave
Victoria 3170
Australia
Telephone +613-9518 3888
Facsimile +613-9518 3833
vsales@moffat.com.au

New Zealand
moffat.co.nz

Moffat Limited
45 Illinois Drive
Izone Business Hub
Rolleston 7675
New Zealand
Telephone +64 3-983 6600
Facsimile +64 3-983 6660
sales@moffat.co.nz

24:7 Service Support

Disclaimer: All unit capacities are based on subjective testing. Moffat accepts no liability for production values. In line with policy to continually develop and improve its products, Moffat Limited reserves the right to change specifications and design without notice.

© Copyright Moffat Ltd
AN-MET-S-2001

an Ali Group Company

The Spirit of Excellence