TECHNICAL DATA SHEET FOR **RN8610EC**

ELECTRIC COOKTOP RANGE CONVECTION OVEN **900mm**



RN8610ECL

Base model

RN8610ECL **RN8610ECH**

- 2.6 kW heating elements
- 220mm x 220mm cast iron hot plates
- Sealed hob with formed spill zone
- GN 2/1 6.6kW electric convection oven
- Drop down door

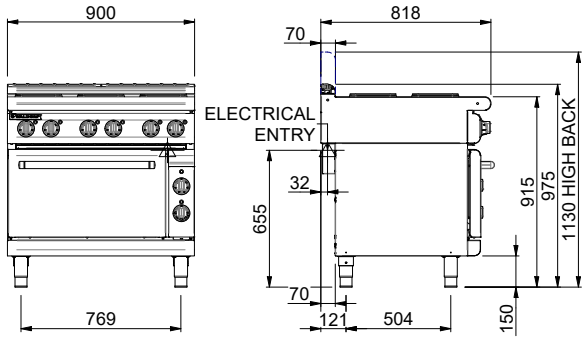

SPECIFICATIONS

Cooktop

Hot plate heating elements 6 x 2.6kW (15.6 kW total)

Oven

4.5kW bottom heating element
2.0kW top heating element
105W fan motor



Power (by model)

	RN8610EC
Electric power	22.2 kW
Cooking surface area	6 x 220mm x 220mm
Oven dimensions - Width 665mm Depth 590mm Height 335mm, Rack Size 655mm x 530mm, Rack positions 5	
Electrical requirements - 22.2 kW, 400-415V, 50/60Hz, 3P+N+E, L1 – 30.5A, L2 – 31.1A, L3 – 31.1A. **Electrical connection** - 130mm from RH side and 655mm from floor.	

Dimensions	**RN8610EC**
Width	900mm
Depth	818mm
Height	915mm 975mm (Low back) 1130mm (High back)
Weight	164kg

Packed data	**RN8610EC**
Volume	1.089m^3
Packed weight	191kg
Width	960mm
Depth	900mm
Height	1260mm

Options -

Rear rollers
Castors
Plinth mounting
Kick panels
High back kit

© Copyright Moffat Ltd
Waldorf.01.2026
ISO9001 Quality Management Standard

TECHNICAL DATA SHEET FOR **RN8610EC**

ELECTRIC COOKTOP RANGE CONVECTION OVEN **900mm**

GENERAL CONSTRUCTION

- Modular hygienic edge joining system
- Stainless steel construction
- Bull nose 2.0mm 304 stainless steel
- Front panels 304 stainless steel
- Front panels vitreous enamelled - Bold
- Control panel vitreous enamelled - Cue
- Low Back and High Back stainless steel with vitreous enamelled cast iron caps
- Welded hob with one-piece formed 2.0mm 304 stainless steel

CONTROLS

- Ergonomic control knobs with panel bezel for easy view control setting
- Solid Plate Elements - Hi-Lo power regulators
- Oven - 60-300C thermostatic control and separate top heat Hi-Lo regulation control
- Power and heating Indictors
- Heating and fan auto-off when door is open
- Over-temperature safety cut-out

Hot Plates

- 6 x 2.6kW cast iron hot plate elements with thermal protection
- 220mm x 220mm cast iron hot plates
- Sealed hob construction with formed spill zone

Oven

- High speed 105W motor and 175mm stainless steel fan
- 2.0mm galvanised steel full chassis
- Vitreous enamelled fully welded GN 2/1 oven
- Vitreous enamelled oven spill tray
- Drop down door with welded internal frame and pressed vitreous enamelled door inner
- Stainless steel braided oven door gasket
- Heavy-duty chromed wire 4 position side racks
- 2 heavy-duty chromed wire oven racks
- Stainless steel legs - adjustable 135-175mm

CLEANING AND SERVICING

- Easy clean stainless steel external finish
- Easy clean vitreous enamelled oven and door inner
- Oven side racks and spill tray lift out for cleaning
- Access to all serviceable parts from front of unit

INSTALLATION INCLUSIONS

- 70mm full width rear connection rebate
- Modular Joining Kit
- Attachment points for Bench Ends

ITEM CODES

900mm Electric Cooktop Range Convection Oven

Electric range convection models supplied as Item Code EC

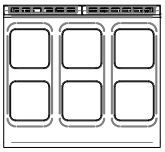



LOW BACK HIGH BACK

Standard	
Low Back	RN8610ECL
High Back	RN8610ECH

CUE

-C0 Cue vitreous enamel control panel colour finish *(see Cue colour code options)*

Low Back	RN8610ECL-C0
High Back	RN8610ECH-C0

BOLD

-B0 Bold vitreous enamel full front colour finish *(see Bold colour code options)*

Low Back	RN8610ECL-B0
High Back	RN8610ECH-B0

STANDARD COLOUR OPTIONS

BLACK Cue -C0 Bold -B0

CHILLI RED Cue -C2 Bold -B2

BURGUNDY Cue -C3 Bold -B3

Designed and manufactured by

MOFFAT

In line with policy to continually develop and improve its products, Moffat Limited reserves the right to change specifications and design without notice.

© Copyright Moffat Ltd
Waldorf.01.2026

ISO9001 Quality Management Standard