Wexiödisk

MOFFAT

WD-7 Duplus

COMBINATION PASSTHROUGH DISHWASHER

STANDARD FEATURES:

- Fitted with Duplus (Double Final Rinse system) reduces water used to just 1Ltr / Cycle
- AutoHood, automatically lifts the hood using water pressure
- AutoStart, automatically closes and starts the cycle
- Combi Dishwasher, switch between Dishwashing and Pot washing by simply pushing a lever
- Large useable wash chamber – W 605mm x D 505mm x H 505mm
- Fits 600mm x 500m baskets
- Unique tilting hood designed directs heat & steam into ECO-FLOW (Optional), plus prevents water dripping on drying dishes
- 3 Cycle times - 72 / 108 / 196 seconds (adjustable)
- Washes up to 50 baskets per hour
- 50 Ltrs wash tank volume
- Electronic control panel with event log recording for diagnostics and trouble shooting
- Automatic cleaning program
- Self-draining wash arms for faster drying dishes
- 1.1kW wash pump with 9kW booster heater
- Smooth internal surfaces for easy cleaning
- Stainless steel construction
- Corner or in-line installation
- Detergent and rinse aid pumps for liquid detergent
- Drain pump
- Break Tank to help sites with low water pressure
- Options include – ECO-FLOW (Heat Recovery system)
- Can be paired with a WD-PRM7 to remove the need for Pre-rinsing dishes

Upgrades and options are available, please contact Moffat for more details.

TECHNICAL INFORMATION:

Dimensions

Width: 782mm
Depth: 739mm
Height: 1540mm

Water

Hot water temperature: 55-70°C
Hot water connection: R½"
Direct (for units with ECO-FLOW)
Cold-water temperature: 5-12°C
Cold water connection: R ½"
Direct Pressure: 180-300kPa
Flow: 18 litres per min
Water quality (Hardness):2-7odH

Waste

Drain hose connection point

Electrical

3P+N+E 400-415V 50/60Hz
10.1kW 15A Cordset supplied

Refer operator manual for complete installation instructions.

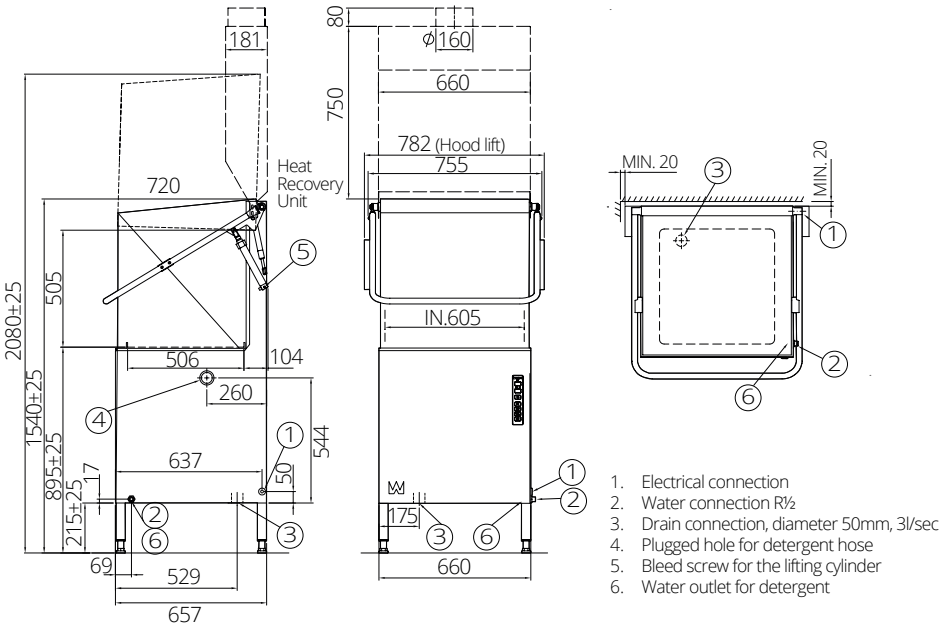

1. Electrical connection
2. Water connection R½
3. Drain connection, diameter 50mm, 3l/sec
4. Plugged hole for detergent hose
5. Bleed screw for the lifting cylinder
6. Water outlet for detergent

Australia
moffat.com.au
Moffat Pty Limited
740 Springvale Road
Mulgrave
Victoria 3170
Australia
Telephone +613-9518 3888
Facsimile +613-9518 3833
vsales@moffat.com.au

In line with policy to continually develop and improve its products, Moffat Limited reserves the right to change specifications and design without notice.

© Copyright Moffat Ltd

AN.WDK.SS.01.23

24:7 Service Support

an Ali Group Company

Ali GROUP

The Spirit of Excellence