Wexiödisk

MOFFAT

WD-7

COMBINATION PASSTHROUGH DISHWASHER

STANDARD FEATURES:

- Washes up to 50 baskets per hour
- 2.5 litres per cycle water consumption
- 50 litre wash tank volume
- Adjustable water pressure to easily switch between normal dishwashing and pot washing
- Large useable wash chamber – W 605mm x D 505mm x H 505mm
- Fits 600mm x 500m baskets
- Unique hood designed for steam to escape at the back of machine
- 3 Cycle times - 72 / 102 / 196 seconds (adjustable)
- Electronic control panel with event log recording for diagnostics and trouble shooting
- Automatic cleaning program
- Self-draining wash arms for faster drying dishes
- 1.1kW wash pump with 9kW booster heater
- Smooth internal surfaces for easy cleaning
- Stainless steel construction
- Corner or in-line installation
- Detergent and rinse aid pumps for liquid detergent
- Drain pump
- Break Tank to help sites with low water pressure
- Supplied with 3 high quality dish racks for cups & plates
- Options include - Automatic hood lift, Auto Start and EcoFlow (heat recovery system)
- Can be paired with a WD-PRM7 to remove the need for Pre- rinsing dishes

Upgrades and options are available, please contact Moffat for more details.

TECHNICAL INFORMATION:

Dimensions

Width: ~~660mm~~ 782mm
Depth: ~~739mm~~ 720mm
Height: 1540mm

Water

Hot water temperature: 55-70°C
Hot water connection: R½"
Direct (for units with ECO-FLOW)
Cold-water temperature: 5-12°C
Cold water connection: R ½"
Direct Pressure: 180-300kPa
Flow: 18 litres per min
Water quality (Hardness):2-7odH

Waste

Drain hose connection point

Electrical

3P+N+E 400-415V 50/60Hz
10.1kW 25A Cordset supplied

Refer operator manual for complete installation instructions.

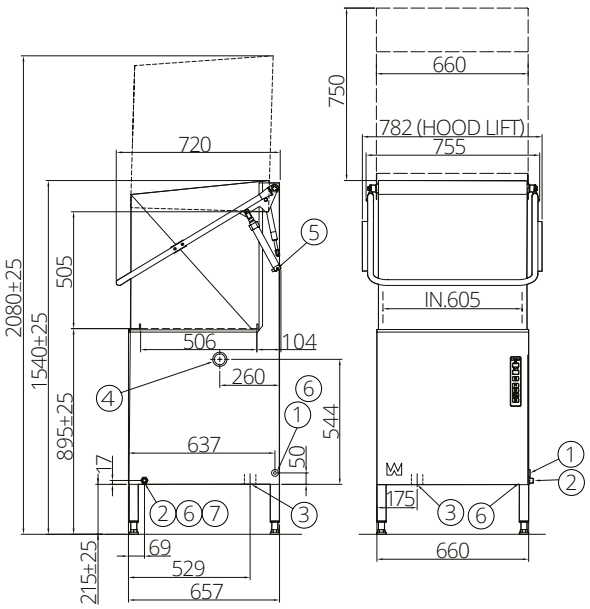

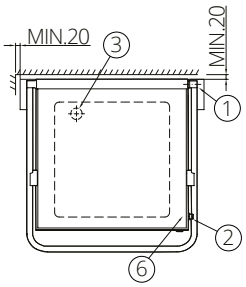

1. Electrical connection
2. Water connection R ½"
3. Drain connection Ø. 50 3 l/sec
4. Plugged hole for detergent hose
5. Bleeding screw lifting cylinder (on machines with automatic hoods)
6. Water outlet for detergent
7. Alternative water connection from below

Australia
moffat.com.au
Moffat Pty Limited
740 Springvale Road
Mulgrave
Victoria 3170
Australia
Telephone +613-9518 3888
Facsimile +613-9518 3833
vsales@moffat.com.au

In line with policy to continually develop and improve its products, Moffat Limited reserves the right to change specifications and design without notice.

© Copyright Moffat Ltd

AN.WDK.SS.01.23

24:7 Service Support

an Ali Group Company

The Spirit of Excellence